HP ProLiant BL20p Generation 2 Server Blade Maintenance and Service Guide

January 2004 (Fourth Edition)
Part Number 316078-004

© Copyright 2004 Hewlett-Packard Development Company, L.P.

The information contained herein is subject to change without notice. The only warranties for HP products and services are set forth in the express warranty statements accompanying such products and services. Nothing herein should be construed as constituting an additional warranty. HP shall not be liable for technical or editorial errors or omissions contained herein.

Microsoft and Windows are U.S. registered trademarks of Microsoft Corporation.

Intel is a registered trademark of Intel Corporation or its subsidiaries in the United States and other countries.

HP ProLiant BL20p Generation 2 Server Blade Maintenance and Service Guide

January 2004 (Fourth Edition)
Part Number 316078-004

Contents

About This Guide

Audience Assumptions v
Technician Notes v
Where to Go for Additional Help vii
Integrated Management Log vii
Telephone Numbers vii

Chapter 1
Illustrated Parts Catalog

ProLiant BL20p Generation 2 Server Blade Components 1-2
System Exploded View 1-2
Server Blade Spare Parts List 1-3

Chapter 2
Removal and Replacement Procedures

Safety Considerations 2-1
Electrostatic Discharge Information 2-1
Server Blade Warnings and Cautions 2-1
Rack Warnings and Cautions 2-2
Symbols on Equipment 2-3
Server Blade Components 2-4
Server Blade Preparation 2-4
Access Panel 2-7
Hard Drive Blanks 2-8
Hot-Plug SCSI Hard Drives 2-9
DIMMs 2-10
Processors, Heatsinks, and Processor Power Modules 2-11
Battery-Backed Write Cache Enabler 2-14
Fan Assembly 2-17
Smart Array 5i Plus Controller Module 2-19
NIC Modules 2-20
Dual Port Fibre Channel Mezzanine Card 2-21
SCSI Backplane 2-22
Power Button/LED Board 2-24
Battery 2-25
System Board 2-27
Server Blade Blanks 2-30

Chapter 3
Diagnostic Tools
ProLiant BL p-Class Diagnostic Tools 3-1
Firmware Upgrades for Management Modules 3-3

Chapter 4
Connectors, LEDs, and Switches
Connectors 4-1
ProLiant BL20p Generation 2 Server Blade 4-1
Diagnostic and Local I/O Cables 4-4
LEDs 4-7
ProLiant BL20p Generation 2 Server Blade Front Panel 4-7
Hot-Plug SCSI Hard Drives 4-8
Switches 4-10
Buttons 4-10
System Switches 4-11

Index

About This Guide

This maintenance and service guide can be used for reference when servicing HP ProLiant BL20p Generation 2 server blades.

WARNING: To reduce the risk of personal injury from electric shock and hazardous energy levels, only authorized service technicians should attempt to repair this equipment. Improper repairs can create conditions that are hazardous.

Audience Assumptions

This guide is for service technicians. HP assumes you are qualified in the servicing of computer equipment and trained in recognizing hazard in products with hazardous energy levels and are familiar with weight and stability precautions for rack installations.

Technician Notes

WARNING: Only authorized technicians trained by HP should attempt to repair this equipment. All troubleshooting and repair procedures are detailed to allow only subassembly/module-level repair. Because of the complexity of the individual boards and subassemblies, no one should attempt to make repairs at the component level or to make modifications to any printed wiring board. Improper repairs can create a safety hazard.

WARNING: To reduce the risk of personal injury from electric shock and hazardous energy levels, do not exceed the level of repairs specified in these procedures. Because of the complexity of the individual boards and subassemblies, do not attempt to make repairs at the component level or to make modifications to any printed wiring board. Improper repairs can create conditions that are hazardous.

WARNING: To reduce the risk of electric shock or damage to the equipment:

- **Disconnect power from the system by unplugging all power cords from the power supplies.**
- **Do not disable the power cord grounding plug. The grounding plug is an important safety feature.**
- **Plug the power cord into a grounded (earthed) electrical outlet that is easily accessible at all times.**

CAUTION: To properly ventilate the system, you must provide at least 7.6 cm (3.0 in.) of clearance at the front and back of the server.

CAUTION: The computer is designed to be electrically grounded (earthed). To ensure proper operation, plug the AC power cord into a properly grounded AC outlet only.

NOTE: Any indications of component replacement or printed wiring board modifications may void any warranty.

Where to Go for Additional Help

In addition to this guide, the following information sources are available:

- *HP ProLiant BL System Best Practices Guide*
- *HP ProLiant BL System Common Procedures Guide*
- *HP ProLiant BL p-Class System Setup and Installation Guide*
- *HP ProLiant BL p-Class System Hardware Installation and Configuration Poster*
- *HP ProLiant Servers Troubleshooting Guide*
- *Altiris eXpress Deployment Server for HP ProLiant Servers User Guide*
- *HP Integrated Lights-Out User Guide*
- *ROM-Based Setup and Utility User Guide*
- White paper: *HP ProLiant BL p-Class System Overview and Planning*
- White paper: *Configuring a Preboot eXecution Environment (PXE) using Red Hat Linux 7.2 on HP ProLiant Servers*
- QuickSpecs
- *Service Quick Reference Guide*

Integrated Management Log

The server includes an integrated, nonvolatile management log that contains fault and management information. The contents of the Integrated Management Log (IML) can be viewed with Insight Manager.

Telephone Numbers

For the name of the nearest HP authorized reseller:

- In the United States, call 1-800-345-1518.
- In Canada, call 1-800-263-5868.

For HP technical support:

- In the United States and Canada, call 1-800-652-6672.
- Outside the United States and Canada, refer to

  www.hp.com

1

Illustrated Parts Catalog

This chapter provides illustrated parts and spare parts lists for the HP ProLiant BL20p Generation 2 server blade components. Refer to Table 1-1 for the names of referenced spare parts.

ProLiant BL20p Generation 2 Server Blade Components

System Exploded View

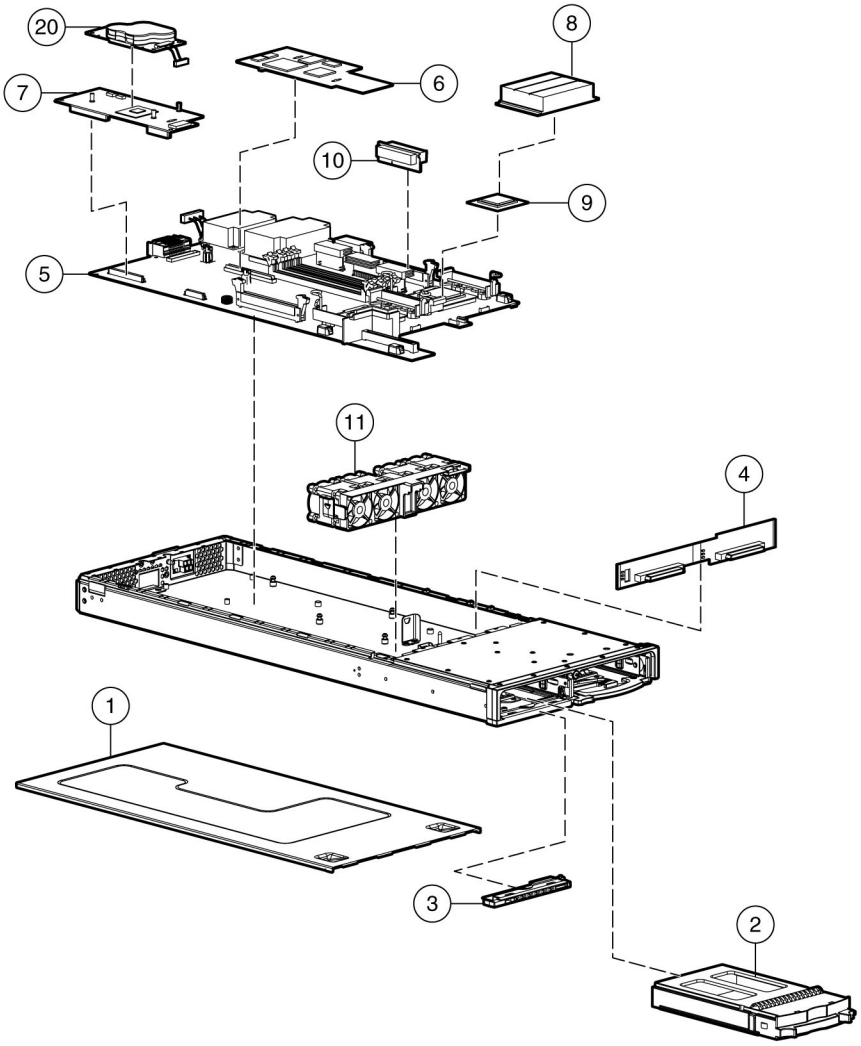

Figure 1-1: System exploded view

Server Blade Spare Parts List

Table 1-1: Server Blade Spare Parts List

Item	Description	Spare Part Number
	Mechanical Components	
1	Access panel	305311-001
2	Hard drive blank	122759-001
	Boards	
3a	Power button/LED board kit with LED cable (for models with local I/O cable) *[1]	348274-001
3b	Power button/LED board kit with LED cable	237552-001
4a	SCSI backplane with cable (for models with local I/O cable) [1]	348273-001
4b	SCSI backplane with cable *	305318-001
5a	System board with heatsinks (2) (for models with local I/O cable) [1]	348271-001
5b	System board with heatsinks *	305312-001
6	Standard NIC module	305314-001
7	HP Smart Array 5i Plus Controller module	305315-001
	System Components	
8	Processor heatsink	305316-001
9	Intel® Xeon 2.8-GHz processor	305317-001
9a	Intel® Xeon 3.06-GHz processor with 512-KB cache *	333055-001
9b	Intel® Xeon 3.06-GHz processor with 1-MB cache *	341763-001
9c	Intel® Xeon 3.2-GHz processor with 1MB cache *	348272-001
	(Reserved)	
10	Processor power module (PPM)	305445-001
11	Fan assembly	305310-001
	Miscellaneous	
12	Plastics and hardware kit *	311767-001
	Bezel assembly	—
	Quarter-turn standoffs (2)	—
	Air baffle	—
	Ejector latch assembly	—
	System board thumbscrew	—

* Not shown

[1] The local I/O cable symbol must be shown on the front bezel of the LED to use this spare.

continued

Table 1-1: Server Blade Spare Parts List *continued*

Item	Description	Spare Part Number
	Rear power connector thumbscrews (2)	—
13	Replacement battery, 3-V lithium *	234556-001
14	ProLiant BL20p G2 server blade return kit *	237582-001
15	Local I/O cable*	355935-001
	Memory	
16	DIMM, 256-MB, ECC registered PC2100 DDR SDRAM * [2]	300699-001
17	DIMM, 512-MB, ECC registered PC2100 DDR SDRAM * [2]	300700-001
18	DIMM, 1-GB, ECC registered PC2100 DDR SDRAM * [2]	300701-001
19	DIMM, 2-GB, ECC registered PC2100 DDR SDRAM * [2]	300702-001
	Options	
20	Battery-Backed Write Cache Enabler, with cable	260740-001
21	Fibre Channel upgrade module *	305313-001
22	RJ-45 Patch Panel 2, with Fibre Channel support *	322299-001
23	Transceiver, 2-Gb, Fibre Channel *	229204-001

* Not shown

[2] DIMMs must be installed in pairs.

2

Removal and Replacement Procedures

This chapter provides subassembly/module-level removal and replacement procedures for system components. After completing all necessary removal and replacement procedures, verify that all components operate properly by running the appropriate diagnostic software:

- For server blade components, run the Server Diagnostics Utility, available from the HP website:

  www.hp.com

- For server blade enclosure and power enclosure components, run the infrastructure diagnostics. Refer to Chapter 3, "Dia gnostic Tools," for more information.

Safety Considerations

Electrostatic Discharge Information

A discharge of static electricity can damage static-sensitive devices or microcircuitry. Proper packaging and grounding techniques are necessary precautions to prevent damage. To prevent electrostatic damage, observe the following precautions:

- Transport products in static-safe containers such as conductive tubes, bags, or boxes.
- Keep electrostatic-sensitive parts in their containers until they arrive at static-free stations.
- Cover workstations with approved static-dissipating material. Use a wrist strap connected to the work surface and properly grounded tools and equipment.
- Keep the work area free of nonconductive materials such as ordinary plastic assembly aids and foam packing.
- Always be properly grounded when touching a static-sensitive component or assembly.
- Use conductive field service tools.

Server Blade Warnings and Cautions

WARNING: To reduce the risk of shock or injury from high-current electrical energy, do not remove the server blade access panel while the server blade is installed in the server blade enclosure. Do not remove the server blade access panel and then install the server blade into the server blade enclosure.

WARNING: To reduce the risk of injury from high-current electrical energy, do not remove the server blade access panel when power is applied through the HP ProLiant p-Class diagnostic station. Remove all power from the server blade before removing the access panel.

WARNING: Setting the server blade Power On/Standby button to the standby position removes power from most areas of the server blade. This process may take 30 seconds, during which time some internal circuitry remains active. To remove power completely, remove the server blade from the server blade enclosure.

WARNING: To reduce the risk of personal injury from hot surfaces, allow the internal system components to cool before touching them.

CAUTION: When performing non-hot-plug operations, you must power down the server blade and/or the system. However, it may be necessary to leave the server blade powered up when performing other operations, such as hot-plug installations or troubleshooting.

Rack Warnings and Cautions

WARNING: The power supply enclosure and the server blade enclosure are very heavy. To reduce the risk of personal injury or damage to the equipment:

- **Observe local occupational health and safety requirements and guidelines for manual material handling.**
- **Remove hot-plug power supplies and server blades from their enclosures before installing or removing the enclosures.**
- **Use caution and get help to lift and stabilize enclosures during installation or removal, especially when the enclosure is not fastened to the rack.**

WARNING: Always use at least two people to lift a power supply enclosure or server blade enclosure into the rack. If the enclosure is being loaded into the rack above chest level, a third person MUST assist with aligning the enclosure with the rails while the other two people support the weight of the enclosure.

WARNING: To reduce the risk of personal injury or damage to the equipment, be sure that:

- **The leveling jacks of the rack are extended to the floor.**
- **The full weight of the rack rests on the leveling jacks.**
- **The stabilizers are attached to the rack if it is a single rack installation.**
- **The racks are coupled in multiple rack installations.**

WARNING: When installing the server blade enclosure in a telco rack, be sure that the rack frame is adequately secured to the building structure.

WARNING: To reduce the risk of personal injury or damage to the equipment, at least two people are needed to safely unload the rack from the pallet. An empty 42U rack weighs 115 kg (253 lb), is over 2.1 m (7 ft) tall, and may become unstable when being moved on its casters. Do not stand in front of the rack as it rolls down the ramp from the pallet, but handle the rack from both sides.

WARNING: To reduce the risk of shock or injury from high-current electrical energy, do not reach into a server blade enclosure once it has been installed in a rack and connected to a working rack bus bar. Do not touch the power or data backplanes within the server blade enclosure once it has been installed.

WARNING: To reduce the risk of shock or injury from high-current electrical energy, do not reach into a power supply enclosure once it has been installed in a rack and connected to a power source. Do not touch the connectors within the power supply enclosure once it has been installed.

WARNING: To reduce the risk of shock or injury from high-current electrical energy, do not open any access covers on the rack bus bar or power bus box after it has been connected to a power source.

CAUTION: Always ensure that equipment is properly grounded before beginning any installation procedure. Electrostatic discharge resulting from improper grounding can damage electronic components. For more information, refer to the setup and installation guide.

Symbols on Equipment

25 kg
55 lb

Any product or assembly marked with these symbols indicates that the component exceeds the recommended weight for one individual to handle safely.

WARNING: To reduce the risk of personal injury or damage to the equipment, observe local occupational health and safety requirements and guidelines for manual material handling.

Any surface or area of the equipment marked with these symbols indicates the presence of a hot surface or hot component.

WARNING: To reduce the risk of injury from a hot component, allow the surface to cool before touching it.

To reduce the risk of injury from electric shock hazards, do not open this enclosure.

WARNING: Any surface or area of the equipment marked with these symbols indicates the presence of electric shock hazards. The enclosed area contains no operator serviceable parts.

Any RJ-45 receptacle marked with these symbols indicates a Network Interface Connection (NIC).

WARNING: To reduce the risk of electric shock, fire, or damage to the equipment, do not plug telephone or telecommunications connectors into this receptacle.

Server Blade Components

Use the procedures in this section to perform service events on ProLiant BL20p G2 server blades.

NOTE: Slate blue denotes serviceable parts, and port denotes hot-pluggable parts.

Server Blade Preparation

To service any internal server blade component, you must power down the server blade and remove it from the server blade enclosure.

CAUTION: Electrostatic discharge can damage electronic components. Be sure you are properly grounded before beginning any installation procedure. For more information, refer to the "Electrostatic Discharge Information" section in this chapter.

System power in server blades does not completely shut off with the front panel Power On/Standby switch or Integrated Lights-Out (iLO) Virtual Power Button feature. The function toggles between on and standby modes, rather than on and off. The standby position removes power from most electronics and the drives, but portions of the power supply and some internal circuitry remain active.

To service internal server blade components:

1. Identify the proper server blade in the server blade enclosure.
2. Remove power from the server blade in one of the following ways:
   - Use the Virtual Power Button feature in the iLO Remote Console to power down the server blade from a remote location. Be sure that the server blade is in standby mode by observing that the power LED is amber.
   - Press the Power On/Standby button on the front of the server blade. Be sure that the server blade is in standby mode by observing that the power LED is amber.

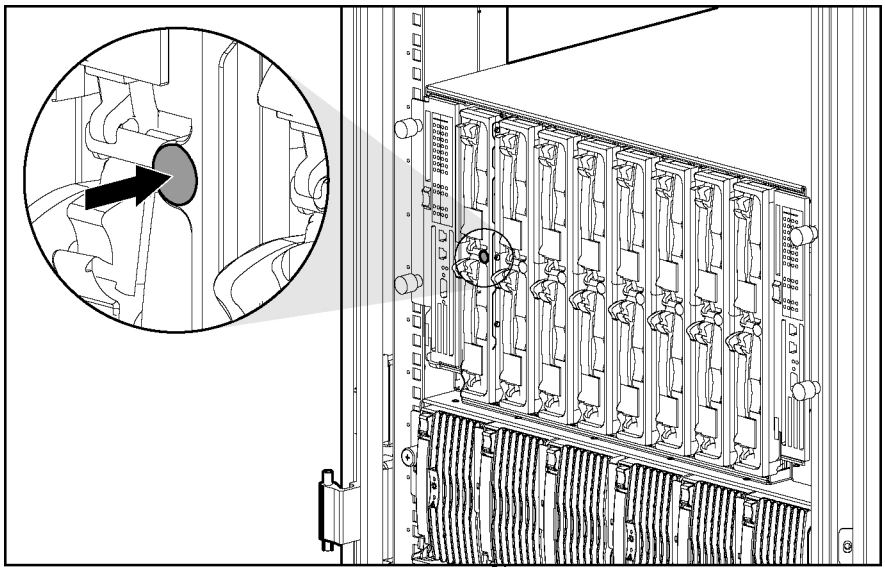

Figure 2-1: Pressing the Power On/Standby button

CAUTION: After you press the release button, the server blade is unlocked from the enclosure. Use both hands to support the server blade when you remove it from the rack.

3. Remove the server blade from the server blade enclosure:
   a. Press the release button (1).
   b. Open the lever (2).
   c. Grasp the lever and slide the server blade from the enclosure (3). Place a hand under the server blade to support it as you remove it from the enclosure.

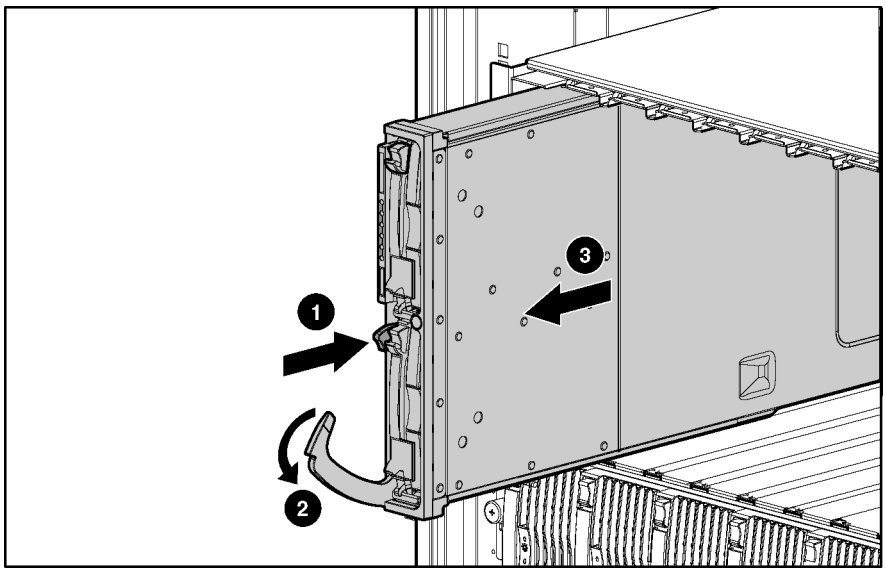

Figure 2-2: Removing the server blade from the server blade enclosure

   d. Place the server blade on a flat, level surface.

CAUTION: Always populate server blade enclosure bays with either a server blade or server blade blank. Operating the enclosure without a server blade or server blade blank results in improper airflow and improper cooling that can lead to thermal damage.

Reverse steps 1 through 3 to install and power up a server blade. Server blades are set to power up automatically upon insertion. If you have changed this setting, use the Power On/Standby button or iLO Virtual Power Button feature to power up the server blade.

For more information about iLO, refer to the *Integrated Lights-Out User Guide*.

Access Panel

To remove the access panel:

1. Power down the server blade and remove it from the server blade enclosure. Refer to the ‘Server Blad e Preparation”section in this chapter.
2. Loosen the thumbscrew (1).
3. Press down on the thumb indentations, slide the access panel toward the rear of the unit about 1.25 cm (0.5 in), and lift to remove the panel (2).

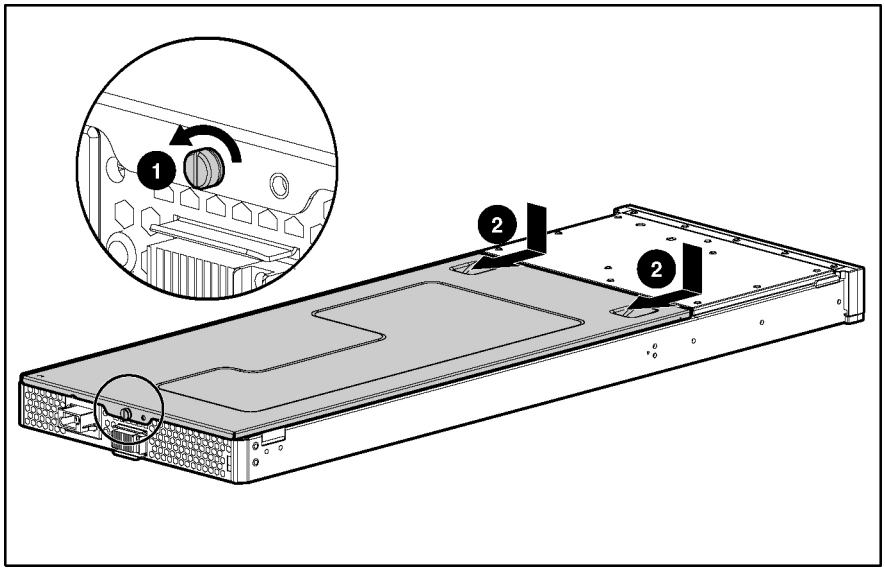

Figure 2-3: Removing the server blade access panel

Reverse steps 1 through 3 to replace the access panel.

Hard Drive Blanks

To remove a hard drive blank:

1. Press the release buttons simultaneously (1).
2. Pull the blank out of the drive bay (2).

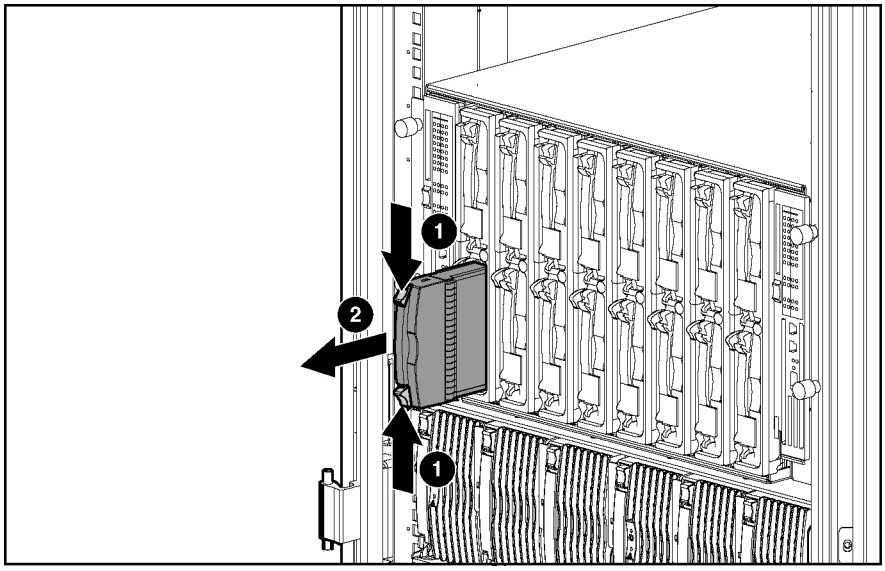

Figure 2-4: Removing a hard drive blank

CAUTION: Always populate hard drive bays with either a hot-plug SCSI hard drive or hard drive blank. Operating the server blade without a hot-plug SCSI hard drive or hard drive blank results in improper airflow and improper cooling that can lead to thermal damage.

To replace the hard drive blank, slide the blank into the bay until it locks into place. The hard drive blank is keyed to fit only one way.

Hot-Plug SCSI Hard Drives

To assess hard drive status, observe the hot-plug SCSI hard drive status LEDs. For a detailed explanation of these LEDs, refer to Chapter 4, "Connectors, LEDs, and Switches."

CAUTION: Refer to the *HP ProLiant Servers Troubleshooting Guide* before removing a hard drive.

IMPORTANT: It is not necessary to power down the server blade before removing or replacing a hot-plug SCSI hard drive.

To remove a hot-plug SCSI hard drive:

1. Press the port-colored release button (1).
2. Open the ejector lever (2).
3. Slide the drive out of the drive cage (3).

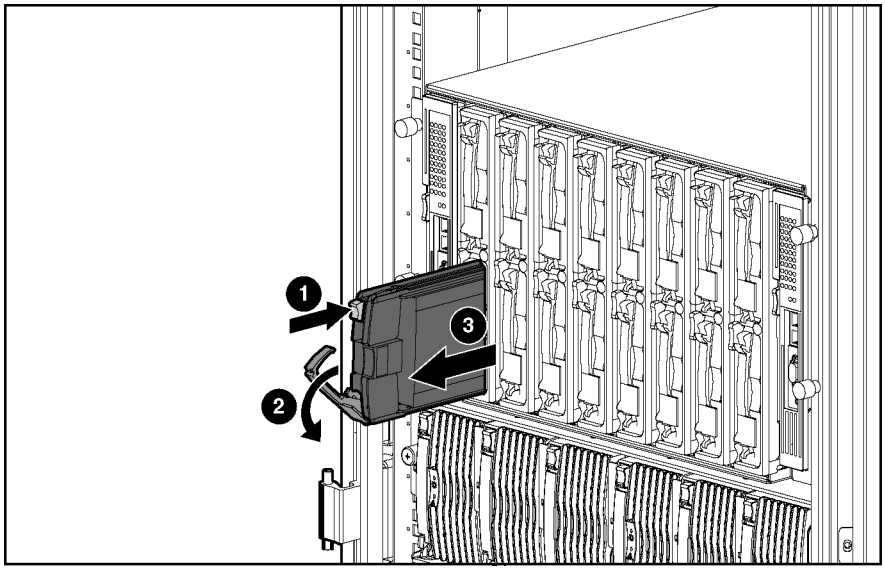

Figure 2-5: Removing a hot-plug SCSI hard drive

CAUTION: Always populate hard drive bays with either a hot-plug SCSI hard drive or hard drive blank. Operating the server blade without a hot-plug SCSI hard drive or hard drive blank results in improper airflow and improper cooling that can lead to thermal damage.

To replace a hot-plug SCSI hard drive:

1. Slide the drive into the cage until it is fully seated.
2. Close the lever, locking the drive into place.

DIMMs

To remove a DIMM:

1. Power down the server blade and remove it from the server blade enclosure. Refer to the ‘Server Blad e Preparation”section in this chapter.
2. Remove the access panel. Refer to the “Access Panel” section in this chapter.

   NOTE: The server blade ships with at least two DIMMs installed in slots 1A and 2A.

3. Open the DIMM slot latches (1).
4. Remove the DIMM from the slot (2).

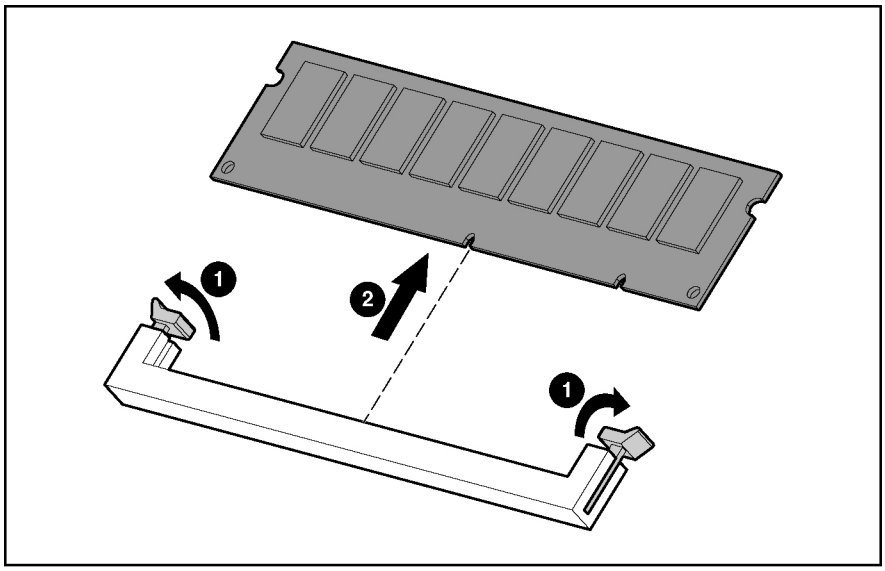

Figure 2-6: Removing a DIMM

CAUTION: For proper DIMM configuration, refer to the setup and installation guide.

CAUTION: Use only HP DIMMs. DIMMs from other sources may adversely affect data integrity.

IMPORTANT: Always install DIMMs in identical pairs.

IMPORTANT: DIMMs do not seat fully if turned the wrong way.

Reverse steps 1 through 4 to replace a DIMM.

Processors, Heatsinks, and Processor Power Modules

To remove a processor:

1. Power down the server blade and remove it from the server blade enclosure. Refer to ‘Server Blad e Preparation”in this chapter.
2. Remove the access panel. Refer to “A ccess Panel” in this chapter.
3. Push down on the slate-blue locking levers on both sides of the processor assembly, and then pull them up (1).

CAUTION: The heatsink is not reusable and must be discarded if removed from the processor after application.

4. Remove the heatsink (2).

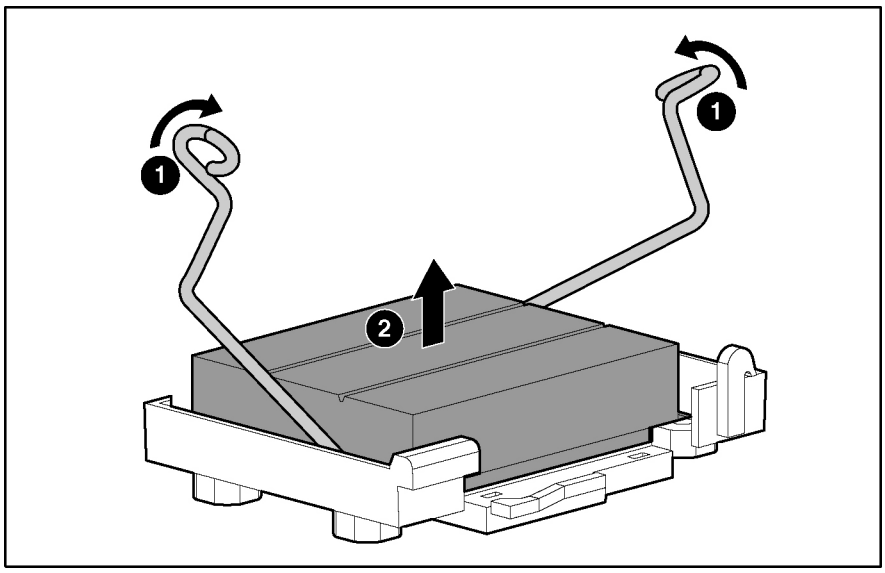

Figure 2-7: Unlatching the processor locking levers

5. Raise the locking lever to release the processor (1), and remove the processor (2).

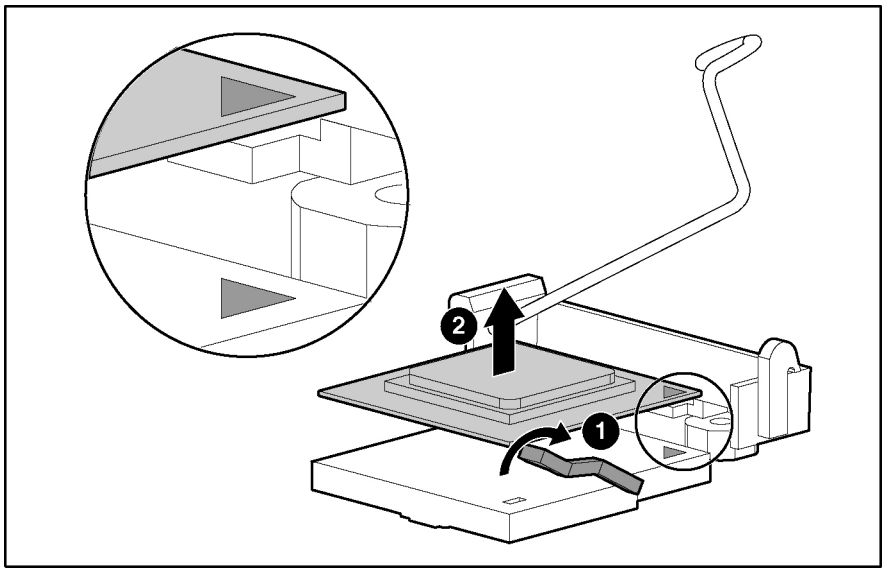

Figure 2-8: Removing the processor

To replace the processor:

CAUTION: When installing the processor into the socket, be sure that the locking lever is raised to avoid damaging pins.

1. With the locking lever raised, insert the processor with the edges properly aligned.
2. Lower the locking lever.
3. Remove the thermal interface media cover from the new heatsink.

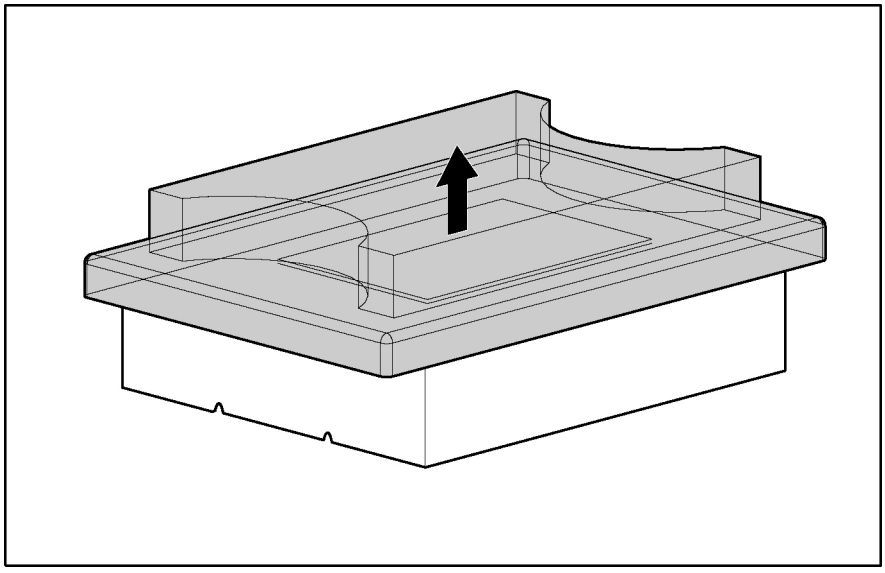

Figure 2-9: Removing the thermal interface media cover

CAUTION: After the cover is removed, do not touch the thermal interface media. Touching the thermal interface media could cause processor overheating.

4. Install the heatsink, and close the locking levers.

CAUTION: The heatsink is not reusable and must be discarded if removed from the processor after application.

To remove a Processor Power Module (PPM):

1. Power down the server blade and remove it from the server blade enclosure. Refer to the ‘Server Blad e Preparation”section in this chapter.
2. Remove the access panel. Refer to the “Access Panel” section in this chapter.
3. Open the latches on the sides of the PPM slot (1).
4. Remove the PPM from the slot (2).

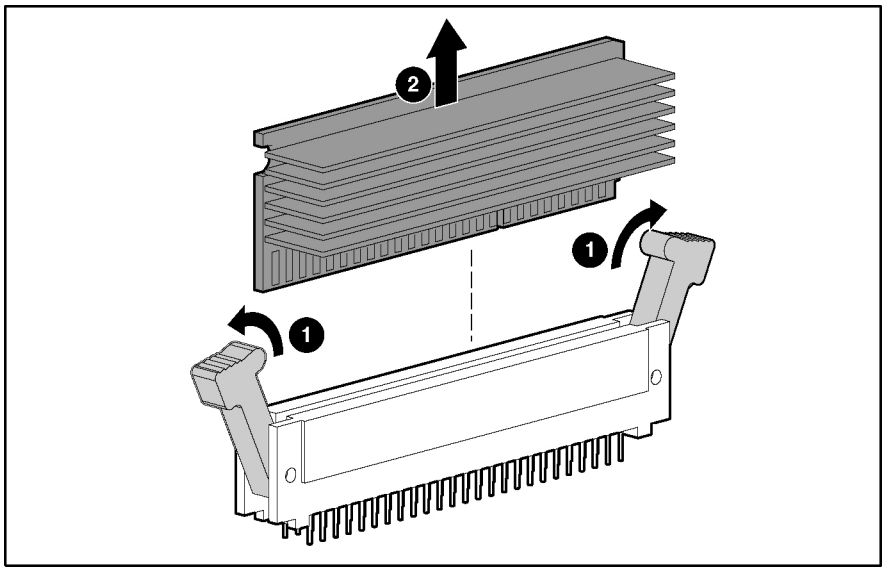

Figure 2-10: Removing a PPM

NOTE: PPMs with the same part number may look different, but are functionally equivalent.

Reverse steps 1 through 4 to replace the PPM.

Battery-Backed Write Cache Enabler

To remove the Battery-Backed Write Cache Enabler:

1. Power down the server blade and remove it from the server blade enclosure. Refer to the ‘Server Blad e Preparation”section in this chapter.
2. Remove the access panel. Refer to the “Access Panel” section in this chapter.
3. Disconnect the cable from the Battery-Backed Write Cache Enabler.

CAUTION: Disconnecting the battery module will cause any unsaved data in the memory module to be lost.

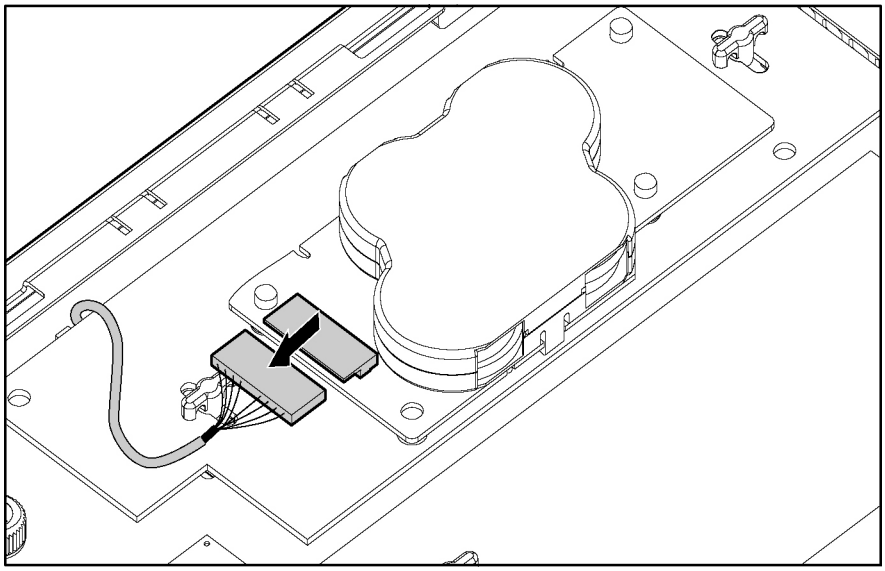

Figure 2-11: Disconnecting the Battery-Backed Write Cache Enabler cable

4. Remove the Battery-Backed Write Cache Enabler from the Smart Array 5i Plus Controller module.

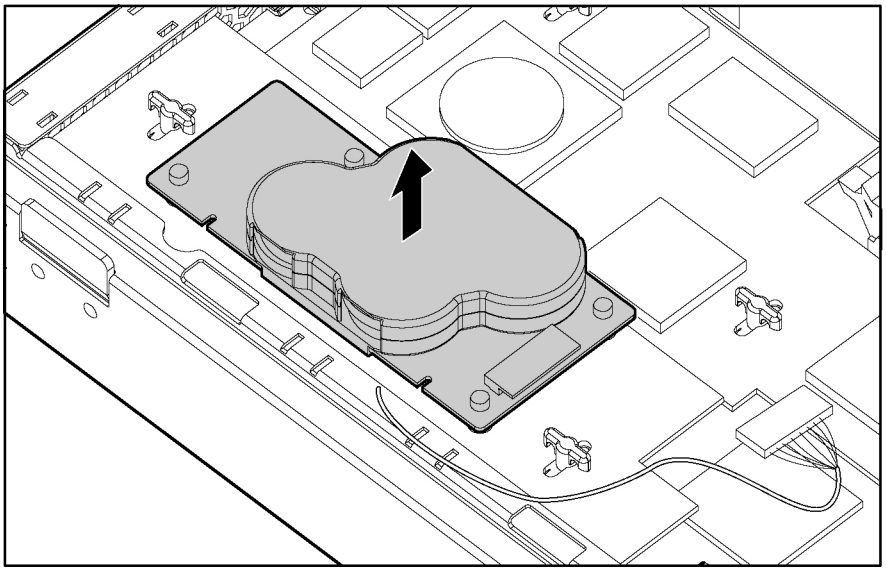

Figure 2-12: Removing the Battery-Backed Write Cache Enabler

5. Remove the Smart Array 5i Plus Controller module from the system board by turning the standoffs one-quarter turn counter-clockwise (1) and lifting the board (2).

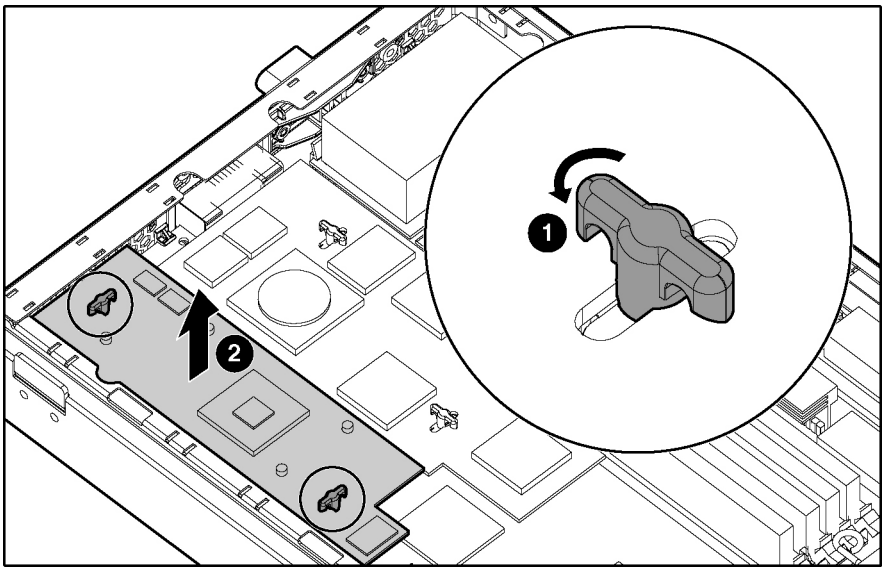

Figure 2-13: Removing the Smart Array 5i Plus Controller module

6. Disconnect the cable from the bottom of the Smart Array 5i Plus Controller module.

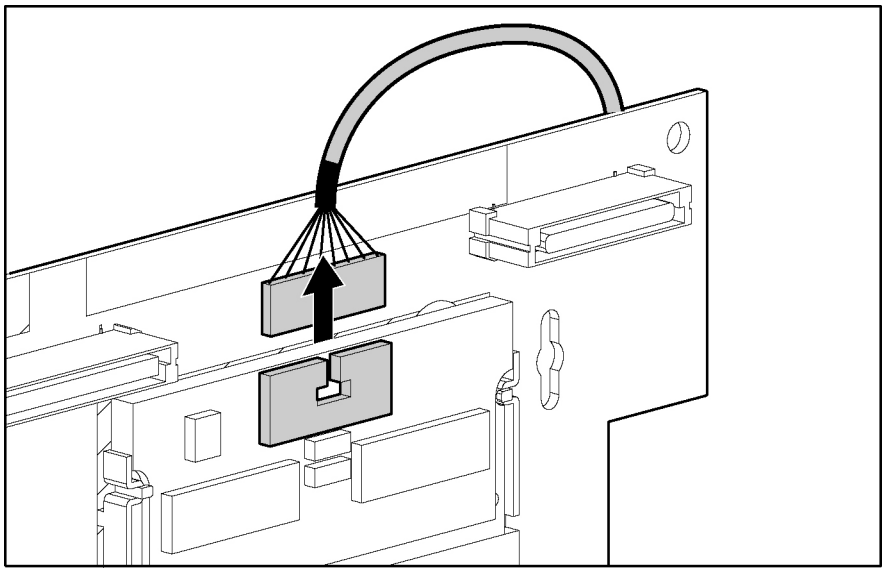

Figure 2-14: Disconnecting the Smart Array 5i Plus Controller module cable

7. Install the Smart Array 5i Plus Controller module by seating it on the system board (1) and turning the standoffs one-quarter turn clockwise (2).

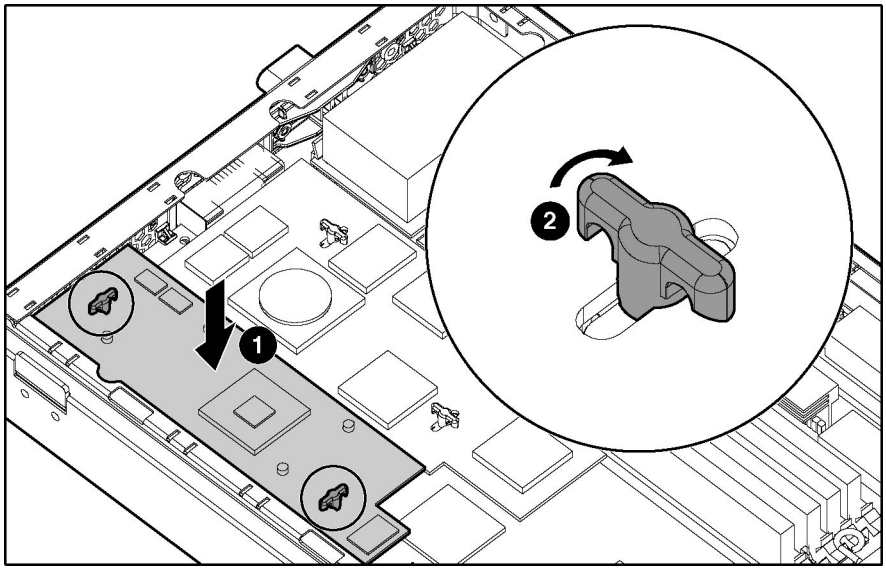

Figure 2-15: Installing the Smart Array 5i Plus Controller module

To replace the Battery-Backed Write Cache Enabler, reverse steps 1 through 7.

Fan Assembly

To remove the fan assembly:

1. Power down the server blade and remove it from the server blade enclosure. Refer to the ‘Server Blad e Preparation”section in this chapter.
2. Remove the access panel. Refer to the “Access Panel” section in this chapter.
3. Disconnect the fan assembly cables from the system board.

IMPORTANT: Be sure to connect the cables to the same connectors when replacing the fan assembly.

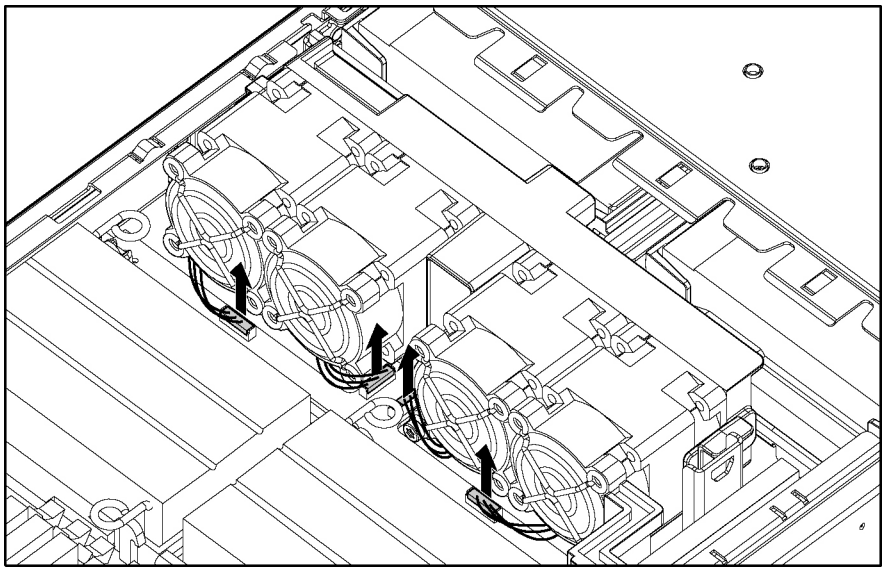

Figure 2-16: Disconnecting fan cables

4. Press the fan retention tab (1), and lift up the assembly (2).

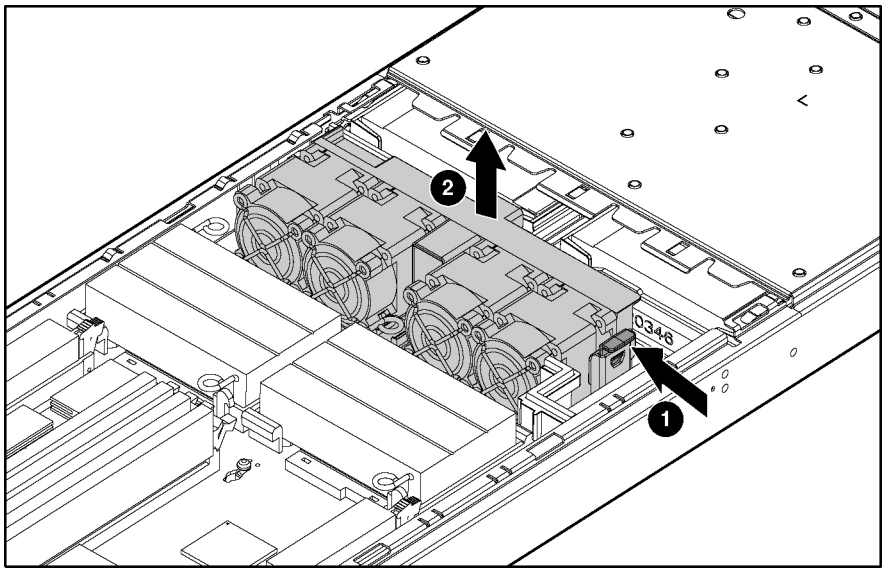

Figure 2-17: Removing a fan assembly

Reverse steps 1 through 4 to replace the fan assembly.

Smart Array 5i Plus Controller Module

To remove the Smart Array 5i Plus Controller module:

1. Power down the server blade and remove it from the server blade enclosure. Refer to the ‘Server Blad e Preparation”section in this chapter.
2. Remove the access panel. Refer to the “Access Panel” section in this chapter.
3. Turn the standoffs one-quarter turn counterclockwise (1).
4. Grasp the front and back of the module, near the connectors, and lift the module (2).

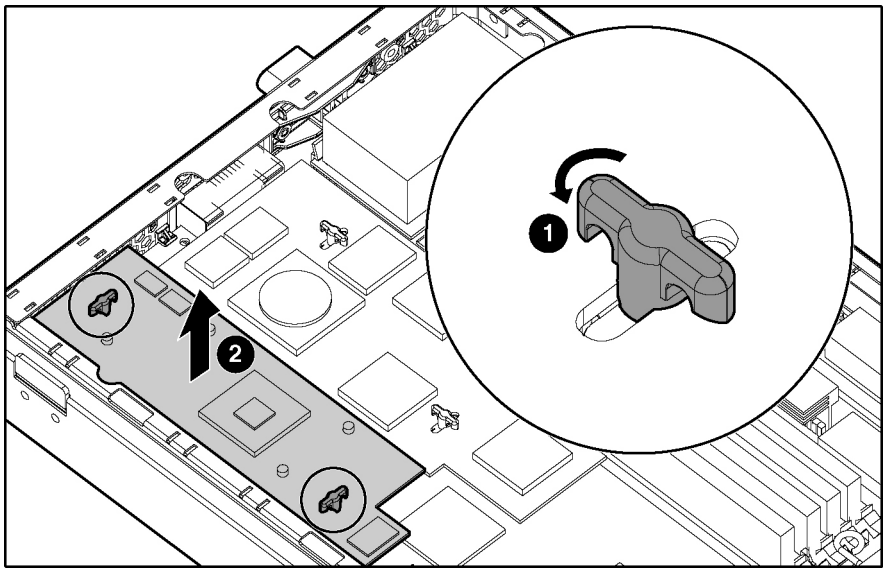

Figure 2-18: Removing the Smart Array 5i Plus Controller module

Reverse steps 1 through 4 to replace the Smart Array 5i Plus Controller module.

NIC Modules

To remove the standard NIC module:

1. Power down the server blade and remove it from the server blade enclosure. Refer to the ‘Server Blad e Preparation”section in this chapter.
2. Remove the access panel. Refer to the “Access Panel” section in this chapter.
3. Remove the standard NIC module:
   a. Turn the quarter-turn standoff latches on the Smart Array 5i Plus Controller module counter clockwise (1).
   b. Lift the Smart Array 5i Plus Controller module from the system board (2).
   c. Turn the quarter-turn standoff latches on the FC mezzanine card counter-clockwise (3).
   d. Lift the FC mezzanine card away from the system board (4).

CAUTION: Lifting one edge of the module at a time may damage the connectors. Be sure to lift the module straight up.

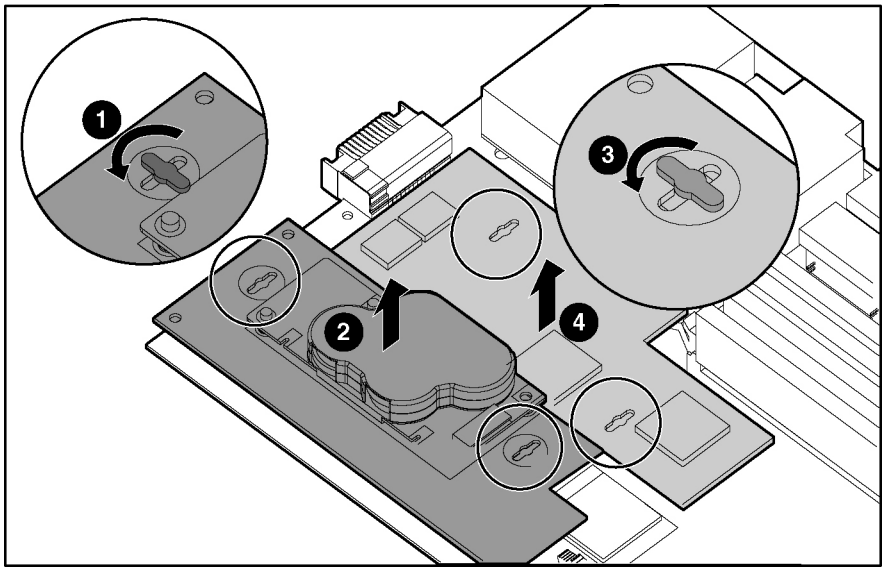

Figure 2-19: Removing the NIC module

Reverse steps 1 through 3d to replace a NIC module.

Dual Port Fibre Channel Mezzanine Card

An optional dual port Fibre Channel (FC) mezzanine card enables Fibre Channel support, for clustering capabilities, and SAN connection when used in conjunction with the RJ-45 Patch Panel 2 or the GbE2 Interconnect Switch with Fibre Channel pass-through option. The card replaces the standard NIC module that is shipped with some server blades. Both the standard NIC module and the FC mezzanine card have two 10/100/1000 NICs. Refer to the *HP ProLiant BL20P Generation 2 Server Blade Setup and Installation Guide* for more information about connecting to a SAN.

To remove the FC mezzanine card:

NOTE: Perform these steps only if you have replaced the standard NIC module with the FC mezzanine card option. The FC mezzanine card may already be installed on some server blades. Refer to the *HP Dual Port Fibre Channel Mezzanine Card Installation Instructions* for more information.

1. Power down the server blade and remove it from the server blade enclosure. Refer to the ‘Server Blad e Preparation”section in this chapter.
2. Remove the access panel. Refer to the “Access Panel” section in this chapter.
3. Remove the FC mezzanine card:
   a. Turn the quarter-turn standoff latches on the Smart Array 5i Plus Controller module counter-clockwise (1).
   b. Lift the Smart Array 5i Plus Controller module from the system board (2).
   c. Turn the quarter-turn standoff latches on the FC mezzanine card counter-clockwise (3).
   d. Lift the FC mezzanine card away from the system board (4).

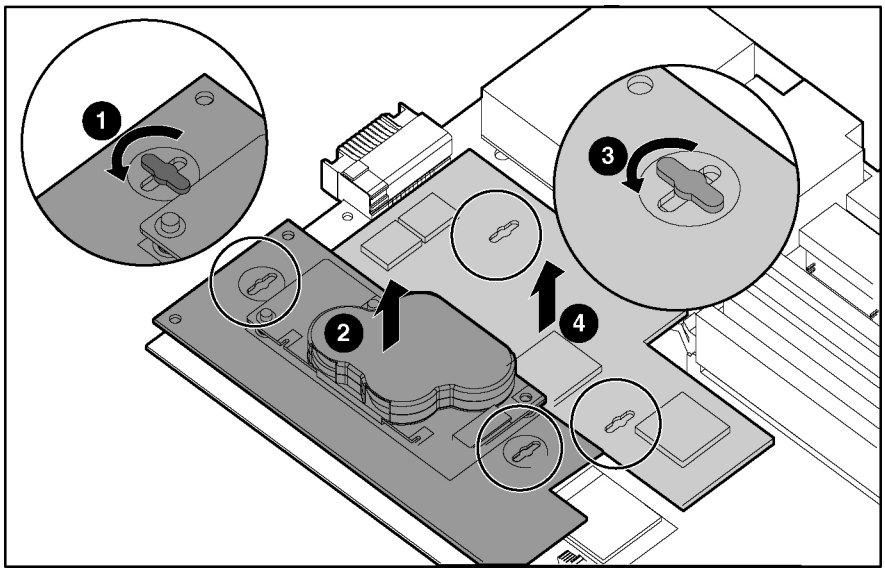

Figure 2-20: Removing the Fibre Channel mezzanine card

Reverse steps 1 through 3d to replace an FC mezzanine card.

SCSI Backplane

To remove the SCSI backplane:

1. Power down the server blade and remove it from the server blade enclosure. Refer to the "Server Blade Preparation" section in this chapter.
2. Remove the access panel. Refer to "Access Panel" in this chapter.
3. Remove any hot-plug SCSI hard drives or hard drive blanks:
   - If any hard drive blanks are installed, refer to the "Hard Drive Blanks" section in this chapter.
   - If any hot-plug SCSI hard drives are installed, refer to the "Hot-Plug SCSI Hard Drives" section in this chapter.
4. Remove the fan assembly. Refer to "Fan Assembly" in this chapter.
5. In some server models, the LED board cable is routed to the center of the SCSI backplane. If the LED board cable is attached to the SCSI backplane, disconnect the LED board cable.
6. Grasp the SCSI backplane on the left side when facing the rear of the server blade, and lift slightly to rotate the SCSI backplane out (1).
7. Lift the SCSI backplane out of the chassis (2).

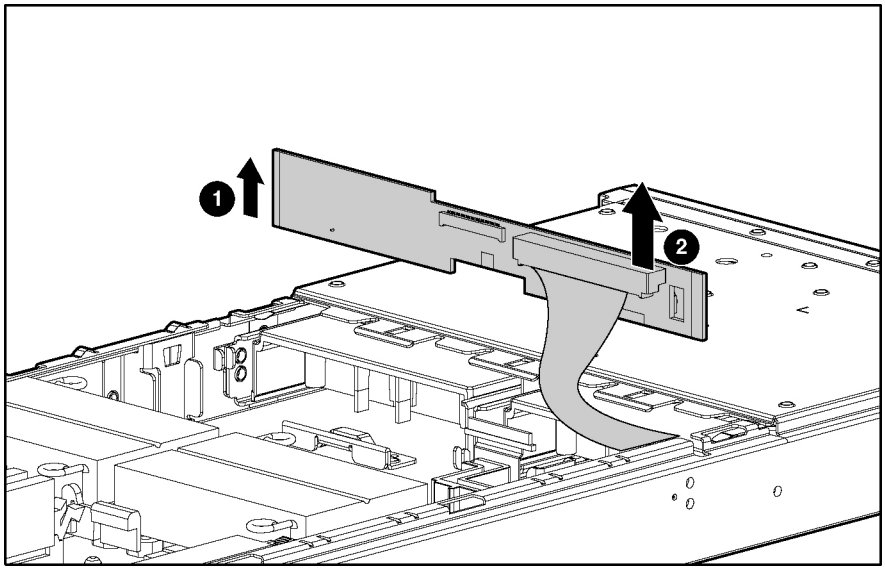

Figure 2-21: Removing the SCSI backplane

8. Remove the plastic fan baffle (1), and disconnect the SCSI backplane cable from the system board (2).

CAUTION: For local I/O cable server models, be sure the LED board cable is not disengaged when removing the fan baffle. When reinstalling the fan baffle, be sure cable is fully seated.

NOTE: The fan baffle is most easily removed at a 45˚ angle. Depending on the server model, the fan baffle may be attached to the system board with a small plastic clip.

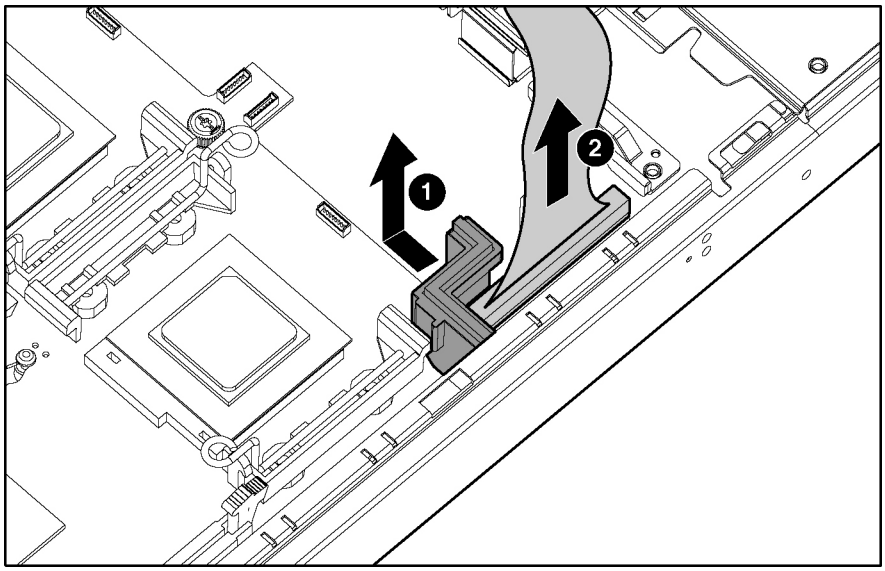

Figure 2-22: Disconnecting the SCSI backplane cable

Reverse steps 1 through 8 to replace the SCSI backplane.

Power Button/LED Board

To remove the power button/LED board:

1. Power down the server blade and remove it from the server blade enclosure. Refer to "Server Blade Preparation" in this chapter.
2. Remove the access panel. Refer to "Access Panel" in this chapter.
3. Remove any hot-plug SCSI hard drives or hard drive blanks:
   - If any hard drive blanks are installed, refer to "Hard Drive Blanks" in this chapter.
   - If any hot-plug SCSI hard drives are installed, refer to "Hot-Plug SCSI Hard Drives" in this chapter.
4. With a T-8 Torx screwdriver, remove the two retaining screws from the bottom of the chassis (1).
5. If the power button/LED board is marked with an I/O icon, disconnect the power button/LED cable from the back left side of the power button/LED board. If the power button/LED board does not have this icon, disconnect the power button/LED cable from the SCSI backplane. Refer to "Diagnostic and Local I/O Cables" in Chapter 4 for identification of the I/O icon.
6. Slide the power button/LED board toward the left outside edge of the chassis (2).

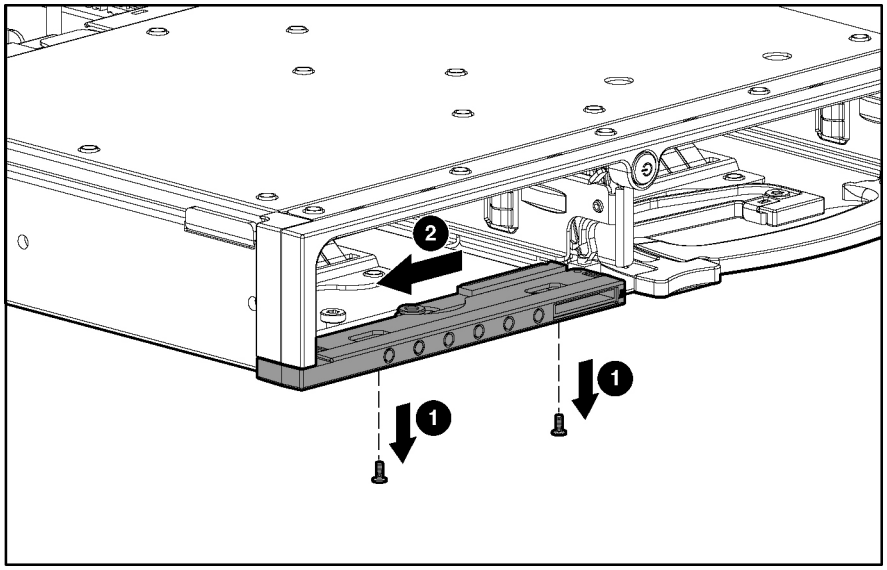

Figure 2-23: Removing the power button/LED retaining screws

7. Tilt the front edge of the power button/LED board down until the keyholes on the rear of the board clear the alignment pins (1).
8. Slide the power button/LED board out of the front of the chassis (2).

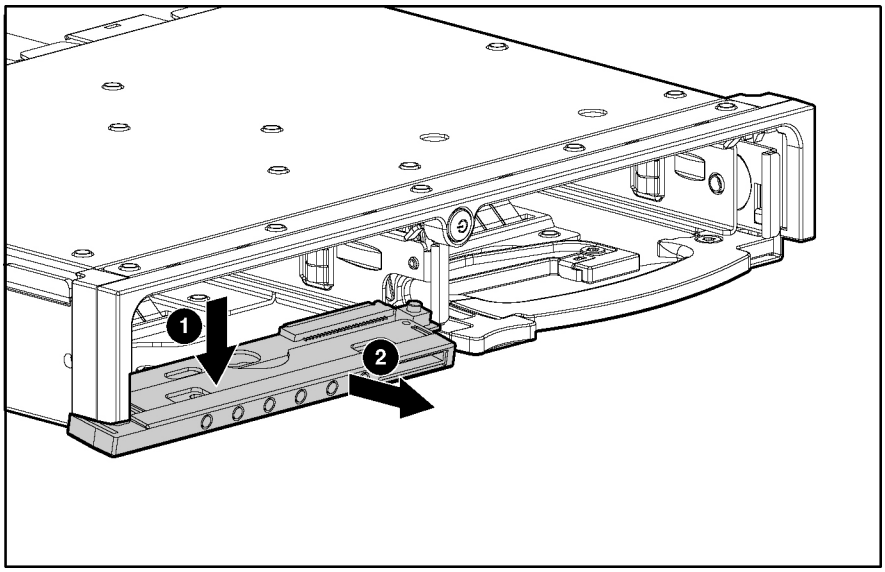

Figure 2-24: Removing the power button/LED board

IMPORTANT: When replacing the power button/LED board on server models marked with an I/O icon, be sure the tab at the end of the power button/LED cable is inserted under the power button/LED board bezel.

Reverse steps 1 through 8 to replace the power button/LED board.

Battery

If the server blade no longer automatically displays the correct date and time, you may need to replace the battery that provides power to the real-time clock. Under normal use, battery life is 5 to 10 years.

WARNING: This server blade contains either an internal lithium manganese dioxide or a vanadium pentoxide battery. A risk of fire and burns exists if the battery pack is not handled properly. To reduce the risk of personal injury:

- **Do not attempt to recharge the battery.**
- **Do not expose to temperatures higher than 60°C (140° F).**
- **Do not disassemble, crush, puncture, short external contacts, or dispose of in fire or water.**
- **Replace only with the spare designated for this product.**

CAUTION: Loss of BIOS settings occurs if the lithium battery is removed. BIOS settings must be reconfigured whenever the battery is replaced.

CAUTION: Batteries, battery packs, and accumulators should not be disposed of along with general household waste. In order to forward them for recycling or proper disposal, please use the public collection system, or return them to the authorized partners or their agents.

IMPORTANT: Run the System Utility to configure the system after replacing the battery. Refer to the *HP ProLiant BL p-Class System Setup and Installation Guide* for more information.

To remove the system board battery:

1. Power down the server blade and remove it from the server blade enclosure. Refer to ‘Server Blad e Preparation”in this chapter.
2. Remove the access panel. Refer to “A ccess Panel” in this chapter.
3. Locate the battery holder on the system board.
4. Remove the existing battery by pushing the tab aside and pulling the battery straight up.

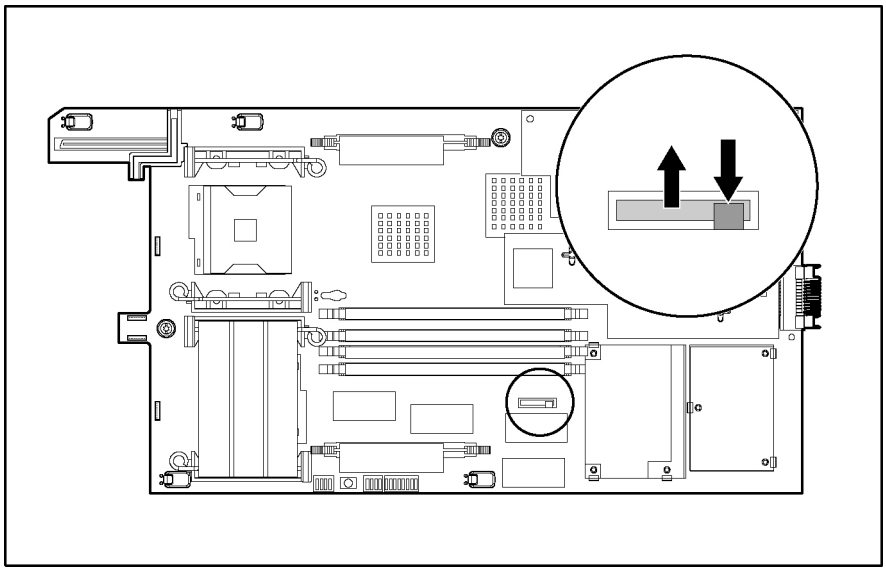

Figure 2-25: Opening the battery retaining clip

To install the system board battery, push it into the socket until the tab locks in place.

System Board

To remove the system board:

1. Power down the server blade and remove it from the server blade enclosure. Refer to the "Server Blade Preparation" section in this chapter.
2. Remove the access panel. Refer to the "Access Panel" section in this chapter.
3. Remove the DIMMs. Refer to the "DIMMs" section in this chapter.
4. Remove the PPMs. Refer to the "Processors, Heatsinks, and Processor Power Modules" section in this chapter.
5. Remove the processor assemblies. Refer to the "Processors, Heat sinks, and Processor Power Modules" section in this chapter.
6. Remove the fan assembly. Refer to the "Fan Assembly" section in this chapter.
7. Remove the Smart Array 5i Plus Controller module. Refer to the "Smart Array 5i Plus Controller Module" section in this chapter.
8. Remove the NIC module. Refer to the "NIC Modules" section in this chapter.
9. Remove the SCSI backplane. Refer to the "SCSI Backplane" section in this chapter.
10. Remove the thumbscrews on the back of the chassis to release the power connector (1), and push the power connector into the chassis (2).

NOTE: The power connector will not push completely into the chassis until the system board is removed. It may be necessary to push in the power connector while removing the system board.

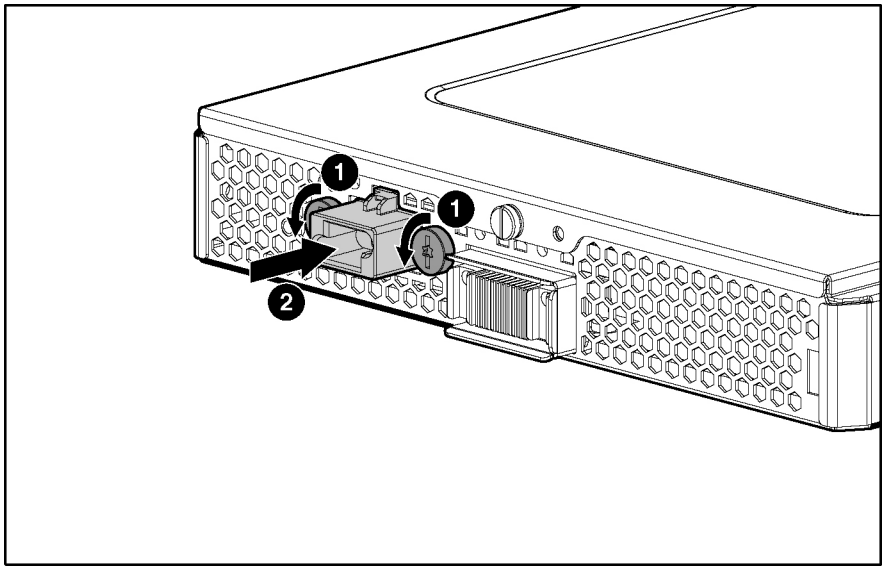

Figure 2-26: Removing the power connector thumbscrews

11. Loosen the system board thumbscrews. Note that the thumbscrew between the VHDM connector and the DC filter module will not remain attached. If necessary, refer to Figure 4-3 for system board component locations.

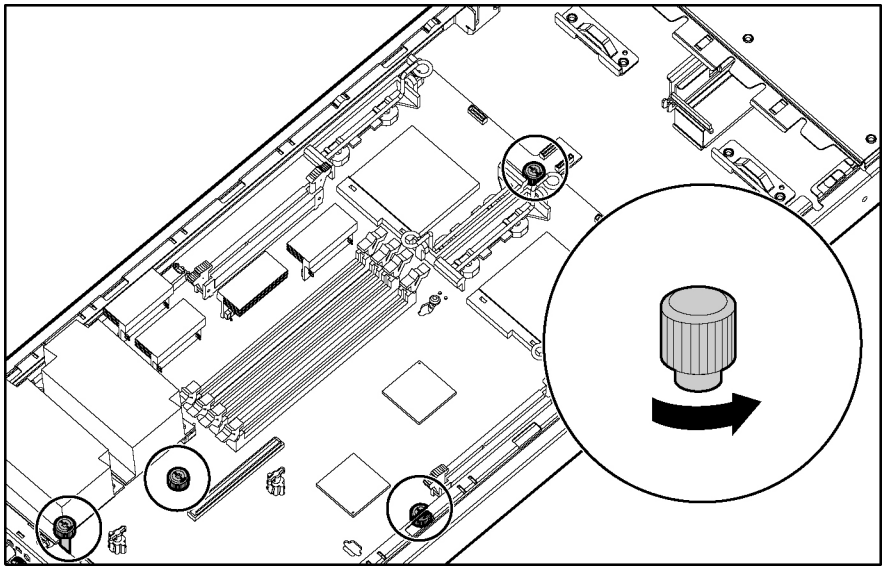

Figure 2-27: Loosening the system board thumbscrews

12. Identify the seven keyhole locations, and slide the system board toward the front of the server blade.

IMPORTANT: If the server blade LED board has an I/O icon, the LED cable should be disconnected from the system board before removing the system board from the server blade.

13. Lift the system board until it comes off the alignment keys.

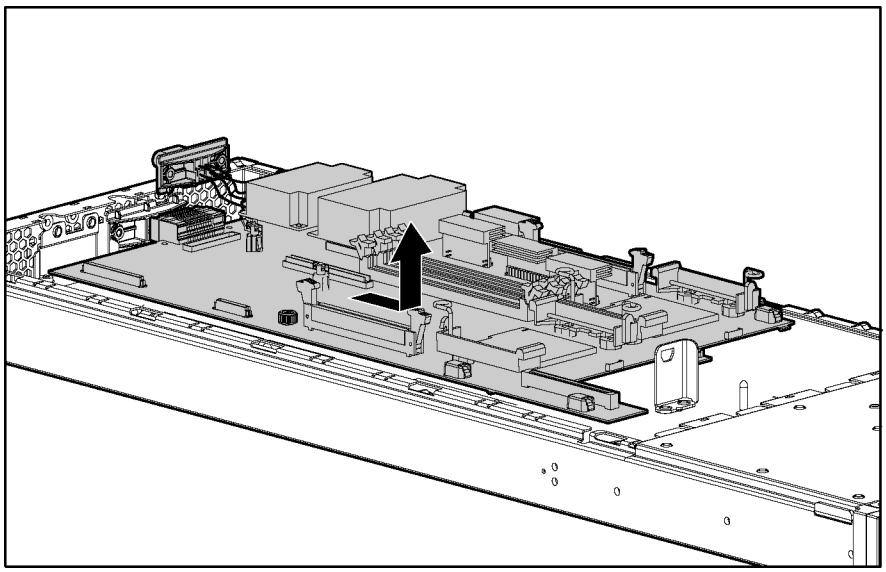

Figure 2-28: Disengaging the system board

14. Lift the edge of the system board nearest the system switches. The edge of the system board nearest the Smart Array 5i Plus Controller module connectors tilts down into the chassis, and the edge of the system board nearest the system switches tilts up out of the chassis. If necessary, refer to Figure 4-3 for the component locations.

IMPORTANT: Be sure to pull the power connector through the chassis before removing the system board. Refer to Figure 2-26 for details.

15. Lift the system board out of the chassis.

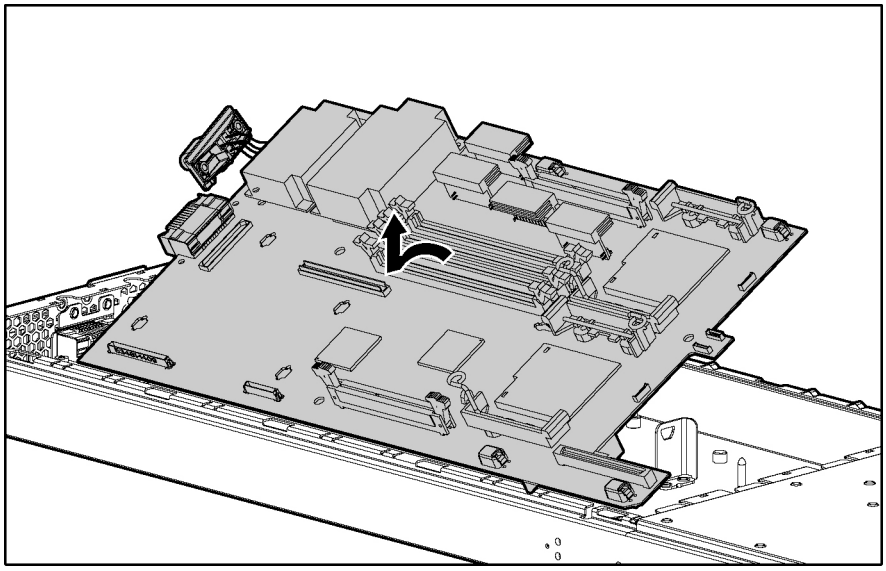

Figure 2-29: Removing the system board

Reverse steps 1 through 15 to replace the system board.

Server Blade Blanks

To remove a server blade blank:

1. Press the release buttons simultaneously (1).
2. Slide the server blade blank from the server blade enclosure (2).

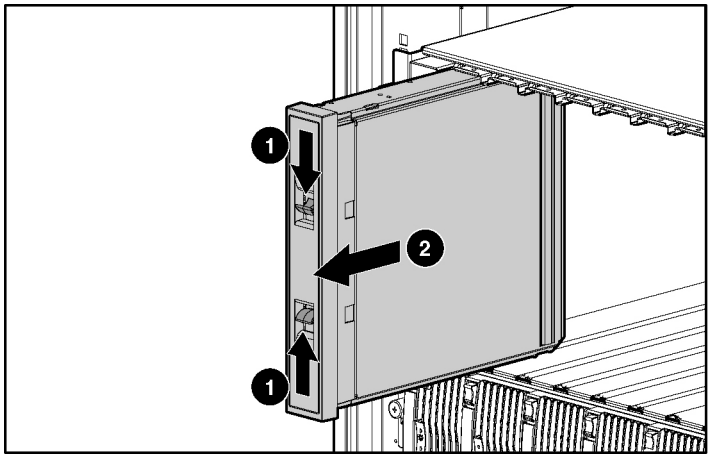

Figure 2-30: Removing a server blade blank

CAUTION: Always populate server blade enclosure bays with either a server blade or server blade blank. Operating the enclosure without a server blade or server blade blank results in improper airflow and improper cooling that can lead to thermal damage.

To replace a server blade blank, align the blank with the empty bay and slide it in until the blank is fully seated.

3

Diagnostic Tools

ProLiant BL p-Class Diagnostic Tools

Use the following tools to diagnose problems, test hardware, and monitor and manage system operations.

Table 3-1: Diagnostic Tools

Tool	Description	How to run the tool
Array Diagnostics Utility (ADU)	ADU is designed to run on all HP systems that support HP array controllers. ADU collects information about the array controllers in the system and generates a list of detected problems.	For a detailed customer advisory on ADU, visit the HP website: http://wwss1pro.compaq.com/support/reference_library/viewdocument.asp?countrycode=1000&prodid=30&source=EX981106_CW01.xml&dt=3&docid=7884 For a complete list of ADU error messages, refer to the *HP ProLiant Servers Troubleshooting Guide*.
Automatic Server Recovery-2 (ASR-2)	ASR-2 automatically restarts the server blade after a catastrophic operating system failure. With ASR-2, you have multiple recovery options: • Available Recovery provides software error recovery and environmental recovery. • Unattended Recovery logs the error information to the IML, resets the server blade, and tries to restart the operating system.	Run RBSU and set ASR-2 to enable this tool.

continued

Table 3-1: Diagnostic Tools *continued*

Tool	Description	How to run the tool
HP Diagnostics	HP Diagnostics tests and verifies operation of HP hardware. If HP Diagnostics finds a hardware failure, it isolates the replaceable part, if possible.	Access HP Diagnostics when POST detects a system configuration error. For a complete list of POST error messages, refer to the *HP ProLiant Servers Troubleshooting Guide*. HP Diagnostics can be downloaded from the HP website: http://h18000.www1.hp.com/support/files/server/us/download/15446.html
Insight Manager 7	Insight Manager 7 is a client/server application used to remotely manage HP hardware in a network environment. Insight Manager reports hardware fault conditions (both failure and pre-failure) and collects data for reporting and graphing.	For more information on viewing and printing the event list, refer to the *Insight Manager User Guide* or the setup and installation guide.
ROMPaq Utility	The ROMPaq Utility checks the system and provides a choice of available ROM revisions and controller firmware.	You can download this utility from the HP website: www.hp.com
Survey Utility	Survey Utility gathers critical hardware and software information on server blades. If a significant change occurs between data-gathering intervals, the Survey Utility marks the previous information and overwrites the survey text files to reflect the latest changes in the configuration.	The Survey Utility is available on the HP ProLiant Essential Rapid Deployment Pack CD or on the HP website: www.compaq.com/support/files/servers/us/index.html
Integrated Lights-Out ROM-Based Setup Utility (iLO RBSU)	The iLO RBSU is the recommended method to configure and set up the iLO. The iLO RBSU is designed to assist you with setting up an iLO on a network; it is not intended for continued administration.	Run iLO RBSU by pressing the **F8** key during POST.
Integrated Management Log (IML)	The IML is a log of system events such as system failures or nonfatal error conditions. View events in the IML from within: • Insight Manager 7 • Survey Utility • Operating system-specific IML utilities	The IML requires HP operating system management drivers. Refer to the HP ProLiant Essentials Rapid Deployment Pack CD for instructions on installing the appropriate drivers.

continued

Table 3-1: Diagnostic Tools *continued*

Tool	Description	How to run the tool
Option ROM Configuration for Arrays (ORCA)	The ORCA Utility is a menu-driven utility that does not require a CD and can be started when the server blade is booting. This utility enables users to perform the following functions: • Create, configure, and/or delete logical drives • Specify RAID levels • Assign online spares • Set interrupts and the boot controller order	Run ORCA by pressing the **F8** key during POST.
HP ProLiant Essentials Rapid Deployment Pack (RDP)	The optional HP ProLiant Essentials RDP is the preferred method for rapid, high-volume server blade deployments. The RDP includes Altiris eXpress Deployment Server and the SmartStart Scripting Toolkit.	Install the CD in the CD-ROM drive of the administrator workstation or client PC and refer to the documentation that ships with the software.
ROM-Based Setup Utility (RBSU)	RBSU configures the hardware installed in the server blade. This utility enables users to perform the following functions: • Store configuration information in nonvolatile memory • Manage memory installation, processor upgrades, network interface cards, and mass storage devices • Assist in installing an operating system • Configure ports and IRQs, if required	Run RBSU by pressing the **F9** key during POST.

Firmware Upgrades for Management Modules

For information about upgrading server blade management module or power management module firmware, refer to the HP website: www.hp.com.

4

Connectors, LEDs, and Switches

Connectors

ProLiant BL20p Generation 2 Server Blade

Front Panel Connectors

The server blade has one front panel connector, a port that accepts either the diagnostic cable or local I/O cable, depending on your server model, for configuration and troubleshooting purposes.

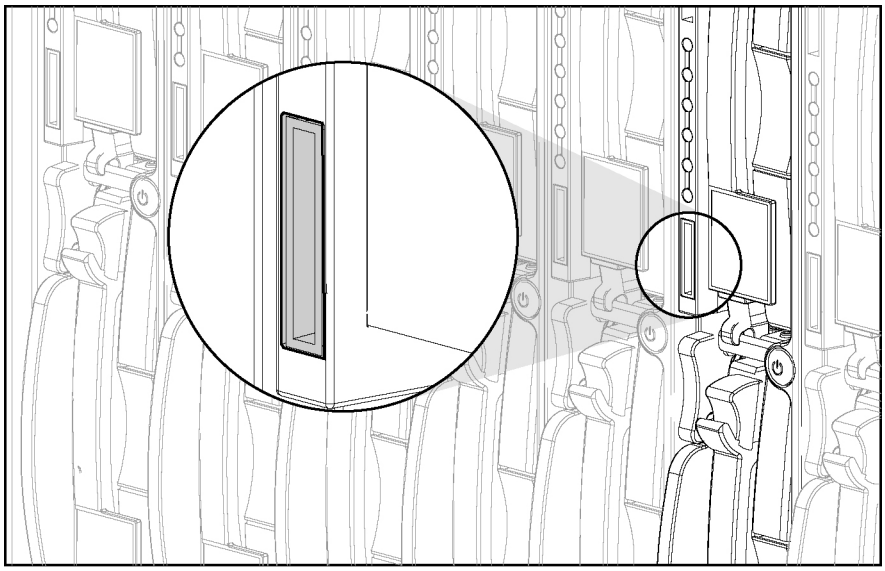

Figure 4-1: ProLiant BL20p G2 diagnostic port

NOTE: The rear iLO port is disabled when iLO is accessed through the diagnostic port on the front panel.

Rear Panel Connectors

Use Figure 4-2 and Table 4-1 to identify ProLiant BL20p G2 server blade rear panel connectors.

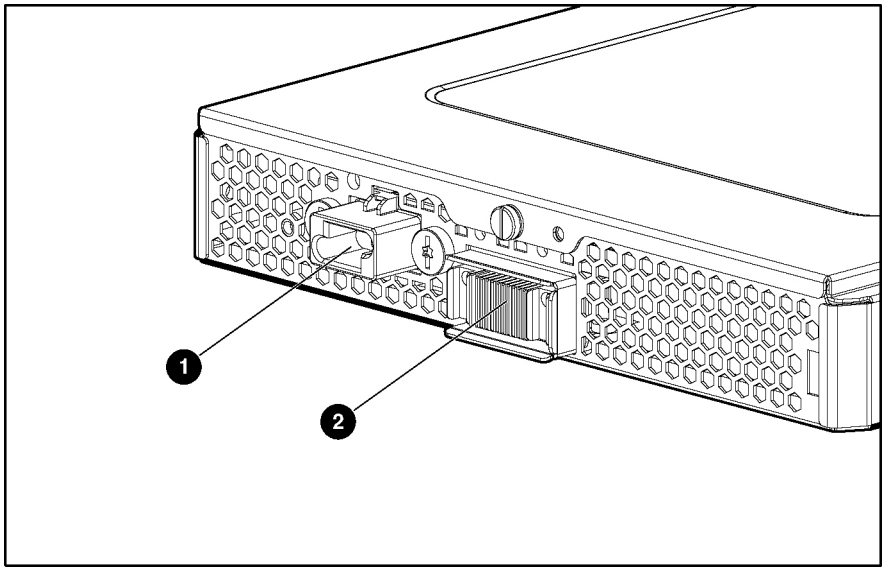

Figure 4-2: ProLiant BL20p G2 server blade rear panel connectors

Table 4-1: ProLiant BL20p G2 Server Blade Rear Panel Connectors

Item	Description
1	Power connector
2	Signal connector

System Board Components and Connectors

Use Figure 4-3 and Table 4-2 to identify ProLiant BL20p G2 system board components and connectors.

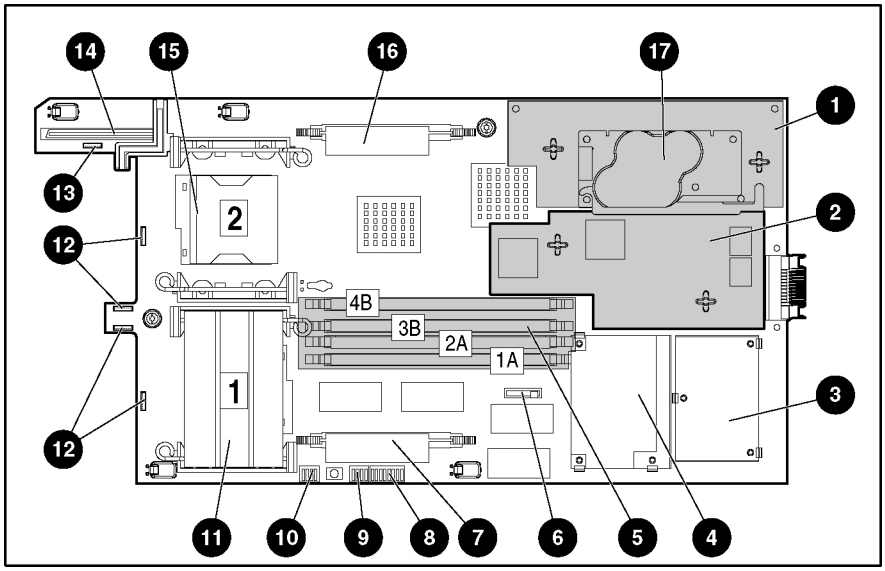

Figure 4-3: ProLiant BL20p G2 system board components and connectors

Table 4-2: System Board Components and Connectors

Item	Description
1	Smart Array 5i Plus Controller module
2	Standard NIC module (shown) or Fibre Channel Mezzanine Card
3	DC filter module
4	DC-to-DC power converter
5	DIMM slots (4)
6	Battery
7	Processor power module slot 1
8	System Maintenance Switch (SW4)
9	System Switch (SW3)
10	System Configuration Switch (SW1)
11	Processor socket 1 (populated)

continued

Table 4-2: System Board Components and Connectors *continued*

Item	Description
12	Fan connectors
13	Power button/LED board connector*
14	SCSI backplane board connector
15	Processor socket 2
16	Processor power module slot 2
17	Optional Battery-Backed Write Cache Enabler

*Depending on the configuration and model, this item may not be found on your system board.

Diagnostic and Local I/O Cables

CAUTION: Disconnect the diagnostic cable or the Local I/O cable from the port when not in use. The port and connector do not provide permanent connections.

CAUTION: Rear iLO connector performance degrades when the local I/O cable or the diagnostic cable is installed, even when the iLO connector on the cable is not in use.

CAUTION: Always match the local I/O cable labeled with the I/O icon to the I/O port also labeled with the I/O icon. The Diagnostic cable and port have no labels. Mismatched cables prevent proper connection.

Use either the diagnostic cable or the local I/O cable to perform some server blade configuration and diagnostic procedures. Depending on the model, the server blade will have either a diagnostic port or an I/O port. The I/O port only accepts the local I/O cable, and the diagnostic port only accepts the diagnostic cable. If the server blade has an I/O icon next to the I/O port on the front of the server blade, use the local I/O cable. If the port has no icon, use the Diagnostic cable.

Refer to Figure 4-4 to identify the I/O icon. Refer to Figure 4-5 and Table 4-3 to identify diagnostic cable connectors.

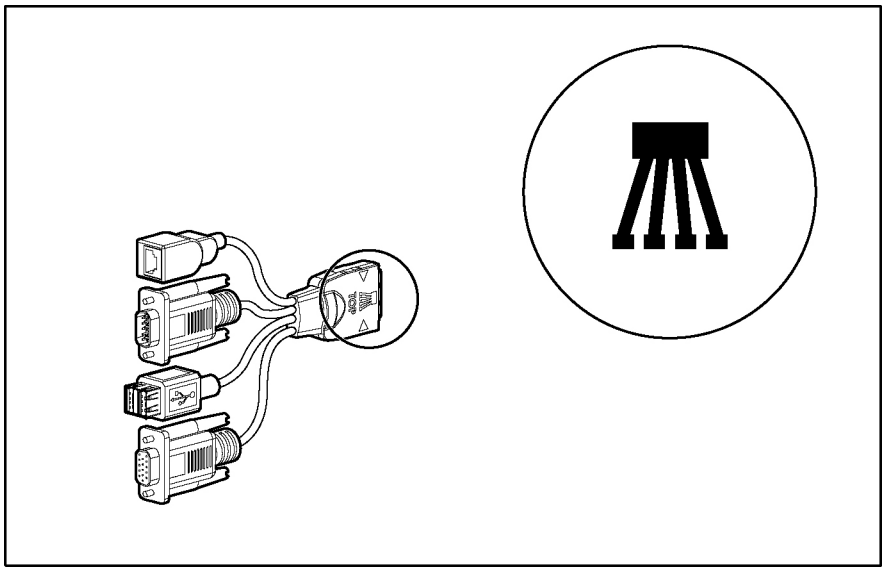

Figure 4-4: Local I/O cable and I/O icon

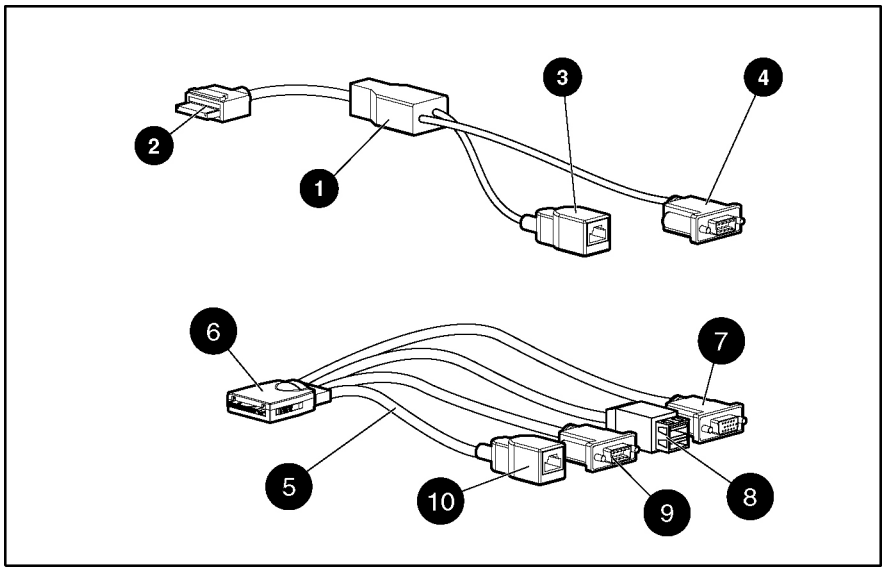

Figure 4-5: Diagnostic and Local I/O cable connectors

Table 4-3: Diagnostic and Local I/O Cable Connectors

Item	Description
1	Diagnostic cable
2	Server blade connector
3	iLO RJ-45 (10/100 Ethernet) connector
4	Kernel debug connector**
5	Local I/O cable*
6	Server blade connector
7	Video connector
8	USB connector (2)
9	Kernel debug connector**
10	iLO RJ-45 (10/100 Ethernet) connector

*The Local I/O cable is labeled with the I/O icon. The Diagnostic cable has no label.

**The kernel debug connector does not function as a serial port.

LEDs

Use the following section to identify LEDs on the following ProLiant BL p-Class system components:

- ProLiant BL20p G2 server blade front panel
- Hot-plug SCSI hard drives

ProLiant BL20p Generation 2 Server Blade Front Panel

Six LEDs on the front of the server blade indicate server status. Use Figure 4-6 and Table 4-4 to identify LED locations and functions.

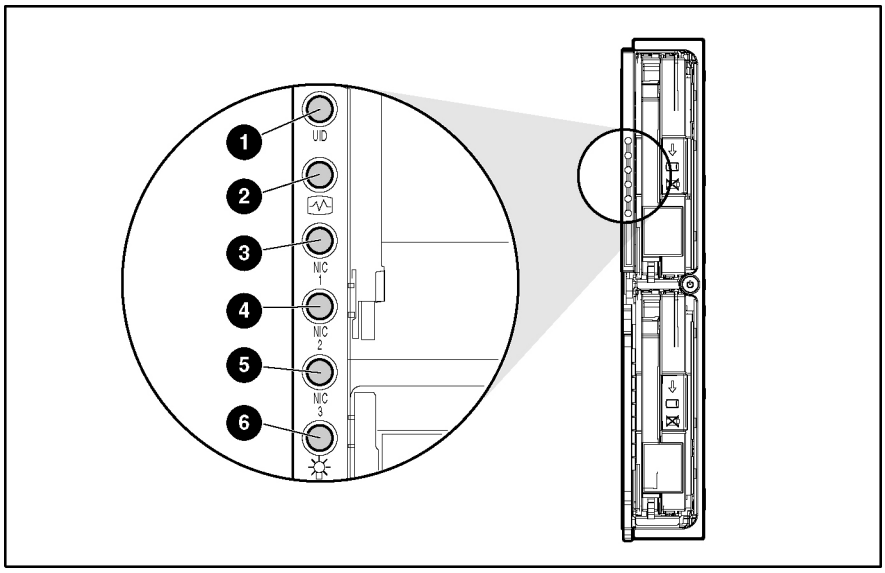

Figure 4-6: ProLiant BL20p G2 server blade front panel LEDs

Table 4-4: ProLiant BL20p G2 Server Blade Front Panel LEDs

Item	LED Description	Status
1	Unit identification	Blue = Flagged Blue flashing = Management mode Off = No remote management
2	Health	Green = Normal status Flashing = Booting Amber = Degraded status Red = Critical status
3	NIC 1	Green = Linked to network Green flashing = Network activity Off = No activity
4	NIC 2	
5	NIC 3	
6	Power On/Standby	Green = On Amber = Standby (power available) Off = Unit off

Hot-Plug SCSI Hard Drives

Each hot-plug SCSI hard drive has three LED indicators located on the front of the drive. The LEDs provide activity, online, and fault status for each corresponding drive when configured as a part of an array and attached to a powered-on Smart Array controller. Their behavior may vary depending on the status of other drives in the array. Use Figure 4-7 and Table 4-5 to identify LED locations and functions.

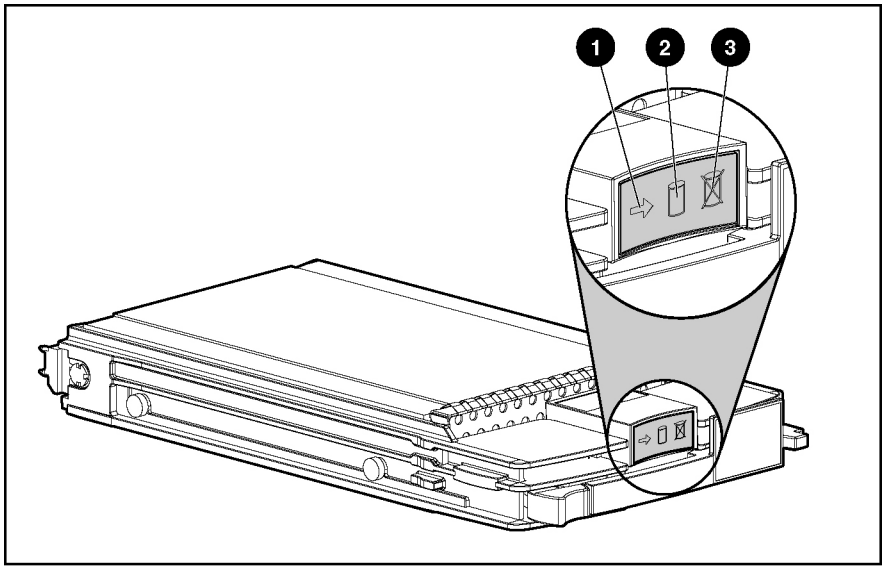

Figure 4-7: Hot-plug SCSI hard drive LEDs

Table 4-5: Hot-Plug SCSI Hard Drive LEDs

1 Activity	2 Online	3 Fault	Means
On	Off	Off	**Do not remove the drive. Removing a drive during this process causes data loss.** The drive is being accessed and is not configured as part of an array.
On	Flashing	Off	**Do not remove the drive. Removing a drive during this process causes data loss.** The drive is rebuilding or undergoing capacity expansion.
Flashing	Flashing	Flashing	**Do not remove the drive. Removing a drive during this process causes data loss.** The drive is part of an array being selected by the Array Configuration Utility. -Or- The Options ROMPaq is upgrading the drive.
Off	Off	Off	OK to replace the drive online if a predictive failure alert is received and the drive is attached to an array controller. The drive is not configured as part of an array. -Or- If this drive is part of an array, a powered-on controller is not accessing the drive. -Or- The drive is configured as an online spare.
Off	Off	On	OK to replace the drive online. The drive has failed and has been placed offline.
Off	On	Off	OK to replace the drive online if a predictive failure alert is received, provided that the array is configured for fault tolerance and all other drives in the array are online. The drive is online and configured as part of an array.
On or flashing	On	Off	OK to replace the drive online if a predictive failure alert is received, provided that the array is configured for fault tolerance and all other drives in the array are online. The drive is online and being accessed.

Switches

Use the following sections to identify the locations and functions of push-button and system switches.

Buttons

Use the "Power On/Standby Button" section to identify push-button switches on the system hardware.

Power On/Standby Button

Setting the server blade Power On/Standby button to the standby position removes power from most areas of the server blade. This process may take 30 seconds, during which time some internal circuitry remains active.

Use Figure 4-8 to identify the button location.

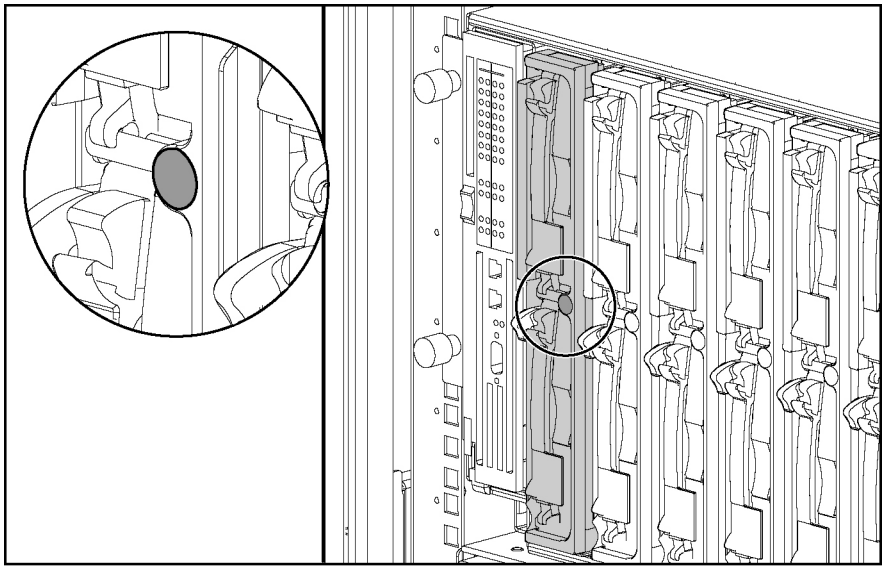

Figure 4-8: Power On/Standby button

System Switches

System switches enable you to change certain settings or to perform advanced diagnostic procedures. The following sections explain the functions of each switch. Use Figure 4-9 and Table 4-6 to identify switch locations and functions.

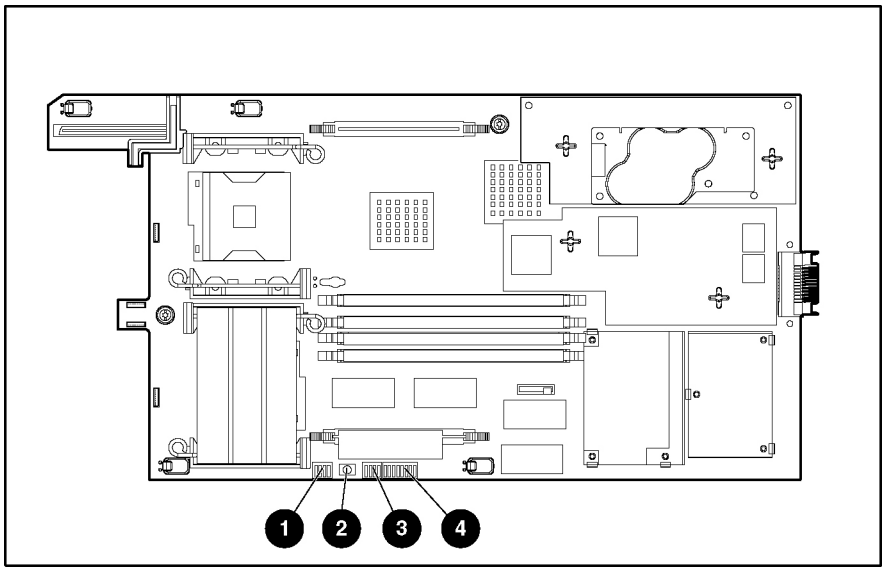

Figure 4-9: Server blade system switches

Table 4-6: Server Blade System Switches

Item	Description
1	System configuration switch (SW1)
2	NMI switch (SW2)
3	System switch (SW3)
4	System maintenance switch (SW4)

Refer to the *HP ProLiant BL20p Generation 2 Setup and Installation Guide* for the switch functions.

NMI Switch

Crash dump analysis is an essential part of eliminating reliability problems such as hangs or crashes in operating systems, device drivers, and applications. Crashes can freeze a system, requiring you to do a hard reset. Resetting the system erases any information that supports root cause analysis.

Systems running Microsoft® Windows® 2000 experience a blue screen trap when the operating system crashes. When this happens, Microsoft recommends that system administrators perform an NMI event by pressing a dump switch. The NMI event allows a hung system to become responsive.

The ProLiant BL20p G2 server blade is equipped with an NMI switch that, when pushed, performs a memory dump before performing a hard reset. The NMI switch is for use by trained service personnel only.

System Configuration Switch Procedures

When you perform troubleshooting steps, this guide may instruct you to perform the following procedures:

- Clear the system configuration.
- Access the redundant ROM.

To complete these procedures, you must change physical settings on the system configuration switch (SW1).

Clearing the System Configuration

To clear the system configuration:

1. Power down the server blade:
   - — Press the Power On/Standby button on the front of the server blade.
   - — Use the virtual power button feature in the iLO remote console.
2. Disconnect the server blade from all power sources:
   - — Remove the server blade from the enclosure and set it on a flat, level surface.
   - — Disconnect the server blade from the diagnostic station.
3. Remove the access panel. Refer to the "Access Panel" section in Chapter 2, "Removal and Replacement Procedures."
4. Change position 6 of SW4 to on.
5. Install the access panel. Refer to the "Access Panel" section in Chapter 2, "Removal and Replacement Procedures."
6. Connect the server blade to system power:
   - — Install the server blade in the enclosure.
   - — Connect the server blade to the diagnostic station.

7. Power up the server blade:
   - Press the Power On/Standby button on the front of the server blade.
   - Use the virtual power button feature in the iLO remote console.
8. Wait for the POST message that prompts you to change the switch setting:

   ```
   Maintenance switch detected in the "On" position.
   Power off the server and turn switch to the "Off" position.
   ```

9. Repeat steps 1 through 3.
10. Change position 6 of SW4 to off.
11. Repeat steps 5 through 7.

IMPORTANT: When the server blade boots after NVRAM is cleared, a delay of up to 2 minutes is normal. During this delay, the system appears non-functional. Do not attempt any procedures during the delay.

Accessing the Redundant ROM

If the system ROM is corrupted, you can set the system to use the backup version or redundant ROM.

To use the redundant ROM:

1. Power down the server blade:
   - —Press the Power On/Standby button on the front of the server blade.
   - —Use the virtual power button feature in the iLO remote console.
2. Disconnect the server blade from all power sources:
   - —Remove the server blade from the enclosure and set it on a flat, level surface.
   - —Disconnect the server blade from the diagnostic station.
3. Remove the access panel. Refer to the "Access Panel" section in Chapter 2, "Removal and Replacement Procedures."
4. Change positions 1, 5, and 6 of SW4 to on.
5. Install the access panel. Refer to the "Access Panel" section in Chapter 2, "Removal and Replacement Procedures."
6. Connect the server blade to system power:
   - —Install the server blade in the enclosure.
   - —Connect the server blade to the diagnostic station.
7. Power up the server blade:
   - —Press the Power On/Standby button on the front of the server blade.
   - —Use the virtual power button feature in the iLO remote console.
8. As soon as the server blade powers up, it emits two beeps.
9. Repeat steps 1 through 3.
10. Change positions 1, 5, and 6 of SW4 to off.
11. Repeat steps 5 through 7.

If both the current and backup versions of the ROM are corrupt, you must return the system board for a service replacement. For spare part numbers, refer to Chapter 1, "Illustrated Parts Catalog."

Index

A

access panel
    removing 2-7
    replacing 2-7
    spare part number 1-3
ADU *See* Array Diagnostics Utility (ADU)
alignment keys 2-29
Array Diagnostics Utility (ADU)
    access 3-1
    description 3-1
ASR-2 *See* Automatic Server Recovery-2 (ASR-2)
Automatic Server Recovery-2 (ASR-2)
    access 3-1
    description 3-1

B

battery
    disposal 2-26
    disposal, caution 2-26
    location 4-3
    removing 2-26
    replacing 2-26
    spare part number 1-4
    warning 2-25
Battery-Backed Write Cache Enabler
    location 4-4
    removing 2-14
    replacing 2-16
    spare part number 1-4
BIOS settings
    caution 2-26
    reconfiguring 2-26
buttons, Power On/Standby 2-4, 4-10

C

cables
    Battery-Backed Write Cache Enabler 2-14
    diagnostic 4-5, 4-6
    local I/O 4-5, 4-6
    power button/LED board 2-22
clearing the system configuration 4-12
component-level repairs v
configurations, clearing the system configuration 4-12
connectors
    NIC module 4-3
    SCSI backplane 4-4
    Smart Array 5i Plus 4-3
crash dump analysis 4-12

D

DC filter module, location 4-3
DC-to-DC power converter, location 4-3
diagnostic tools 3-1
Diagnostics Utility, description 3-2
DIMMs
    removing 2-10
    replacing 2-10
    slot locations 4-3
    spare part number 1-4
dual port Fibre Channel mezzanine card 2-21

E

electric shock, warning 2-3
electrostatic discharge 2-1
explosion, warning 2-25

F

fan assembly
    removing 2-17
    replacing 2-18
    spare part number 1-3
Fibre Channel upgrade module, spare part number 1-4

G

grounding vi
    guidelines 2-1
    plug v

guides
HP ProLiant BL p-Class System Setup and Installation Guide 3-2
HP ProLiant Servers Troubleshooting Guide 3-1, 3-2

H

hard drive blank
removing 2-8
replacing 2-8
spare part number 1-3
heatsink, spare part number 1-3
help resources vii
hot 2-3
hot-plug SCSI hard drives
LEDs 4-8
removing 2-9
replacing 2-9
HP authorized reseller vii
HP NC3163 Fast Ethernet NIC Embedded 10/100 WOL *See* NIC module
HP ProLiant BL p-Class System Setup and Installation Guide 3-2
HP ProLiant Essentials Rapid Deployment Pack
access 3-3
description 3-3

I

icon, I/O 4-6
iLO RBSU *See* Integrated Lights-Out ROM-Based Setup Utility (iLO RBSU)
IML *See* Integrated Management Log (IML)
Insight Manager *See* Insight Manager 7
Insight Manager 7
access 3-2
description 3-2
installing *See* replacing
Integrated Lights-Out (iLO), system board switch 4-11
Integrated Lights-Out ROM-Based Setup Utility (iLO RBSU)
access 3-2
description 3-2
Integrated Management Log (IML)
access 3-2
description 3-2
viewing 3-2

K

keys, alignment 2-29
kits
plastics and hardware, server blade 1-3
return, server blade 1-4

L

LEDs
hot-plug SCSI hard drive 4-8
NICs 4-8
Power On/Standby 4-8
server blade, front panel 4-7
server health 4-8
unit identification (UID) 4-8

M

memory *See* DIMMs

N

NIC module
location 4-3
removing 2-20
replacing 2-20
spare part number 1-3
NIC upgrade module
removing 2-20
replacing 2-20
NICs, LEDs 4-8
NMI *See* non-maskable interrupt (NMI) switch
non-maskable interrupt (NMI) switch 4-11, 4-12

O

Option ROM Configuration for Arrays (ORCA)
access 3-3
description 3-3
ORCA *See* Option ROM Configuration for Arrays (ORCA)

P

parts catalog, illustrated 1-1
plastics and hardware kit, spare part number 1-3
power button/LED board
removing 2-24
replacing 2-25
spare part number 1-3
Power On/Standby button, definition 4-10
powering down, server blade 2-4
PPM *See* processor power module (PPM)
processor assembly
removing 2-11
replacing 2-12
socket locations 4-3
processor power module (PPM)
removing 2-13
replacing 2-13
slot location 4-3
spare part number 1-3
processor, spare part number 1-3

R

rack
- cautions 2-2
- warnings 2-2
- weight 2-3

RBSU *See* ROM-Based Setup Utility
redundant ROM, accessing 4-14
removing
- access panel 2-7
- battery 2-26
- Battery-Backed Write Cache Enabler 2-14
- DIMMs 2-10
- fan assembly 2-17
- hard drive blank 2-8
- hot-plug SCSI hard drives 2-9
- NIC module 2-20
- power button/LED board 2-24
- PPM 2-13
- processor assembly 2-11
- SCSI backplane 2-22
- server blade blank 2-30
- server blades 2-6
- Smart Array 5i Plus Controller module 2-19
- system board, server blade 2-27

removing SCSI backplane 2-22
replacing
- access panel 2-7
- battery 2-26
- Battery-Backed Write Cache Enabler 2-16
- DIMMs 2-10
- fan assembly 2-18
- hard drive blank 2-8
- hot-plug SCSI hard drives 2-9
- NIC module 2-20
- power button/LED board 2-25
- PPM 2-13
- processor assembly 2-12
- SCSI backplane 2-23
- server blade blank 2-30
- server blades 2-6
- Smart Array 5i Plus Controller module 2-19
- system board, server blade 2-29

return kit, server blade 1-4
ROM-Based Setup Utility (RBSU)
- access 3-3
- description 3-3

ROMPaq Utility
- access 3-2
- description 3-2

S

SCSI backplane
- part number 1-3
- removing 2-22
- replacing 2-23

SCSI backplane board connector, location 4-4
SCSI hard drives *See* hot-plug SCSI hard drives
server blade
- cautions 2-1
- LEDs 4-7
- powering down 2-4
- removing 2-6
- replacing 2-6
- spare parts list 1-3
- system switches 4-11
- warnings 2-1

server blade access panel *See* access panel
server blade blank
- removing 2-30
- replacing 2-30

slots
- DIMMs, location 4-3
- PPM, location 4-3

Smart Array 5i Plus Controller module
- location 4-3
- removing 2-19
- replacing 2-19
- spare part number 1-3

standard NIC module *See* NIC module
Survey Utility
- access 3-2
- description 3-2

switches
- iLO (SW2) 4-11
- NMI 4-11, 4-12
- server blade system 4-11
- system (SW3) 4-11
- system configuration (SW1) 4-11

symbols, on equipment 2-3
system board, server blade
- removing 2-27
- replacing 2-29
- spare part number 1-3

system configuration switch 4-11
system maintenance switch, location 4-3
system switch, location 4-3

T

technician notes v
telephone numbers vii

U

unit identification (UID), LEDs 4-8
utilities
Diagnostics 3-2
HP ProLiant Essentials Rapid Deployment Pack 3-3
Insight Manager 7 3-2
Integrated Lights-Out ROM-Based Setup Utility (iLO RBSU) 3-2
Option ROM Configuration for Arrays (ORCA) 3-3
RBSU 3-3
ROMPaq 3-2
Survey Utility 3-2

V

ventilation clearances vi
voltage regulator module *See* processor power module (PPM)
VRM *See* processor power module (PPM)

W

warranty vi