HP ProLiant DL145 Generation 3 Server

Maintenance and Service Guide

Part number: 430047-004

Fourth Edition: April 2007

Legal notices

Printed in the US

Part number: 430047-004

Fourth Edition: April 2007

Contents

Illustrated parts catalog

This chapter provides the illustrated parts breakdown and spare parts lists for the HP ProLiant DL145 Generation 3 server. Information for contacting HP is also provided.

Customer self-repair (CSR)

What is customer self-repair?

HP's customer self-repair program offers you the fastest service under either warranty or contract. It enables HP to ship replacement parts directly to you so that you can replace them. Using this program, you can replace parts at your own convenience.

A convenient, easy-to-use program:

- An HP support specialist will diagnose and assess whether a replacement part is required to address a system problem. The specialist will also determine whether you can replace the part.
- Replacement parts are express-shipped. Most in-stock parts are shipped the very same day you contact HP. You may be required to send the defective part back to HP, unless otherwise instructed.
- Available for most HP products currently under warranty or contract. For information on the warranty service, refer to the HP website (**http://h18004.www1.hp.com/products/servers/platforms/warranty/index.html**).

For more information about HP's customer self-repair program, contact your local service provider. For the North American program, refer to the HP website (**http://www.hp.com/go/selfrepair**).

Table 1 and Table 2 show the customer replaceable parts under the CSR program.

NOTE: Table items marked with an asterisk (*) are not shown in the figures.

Mechanical parts exploded view

Figure 1 Mechanical parts exploded view

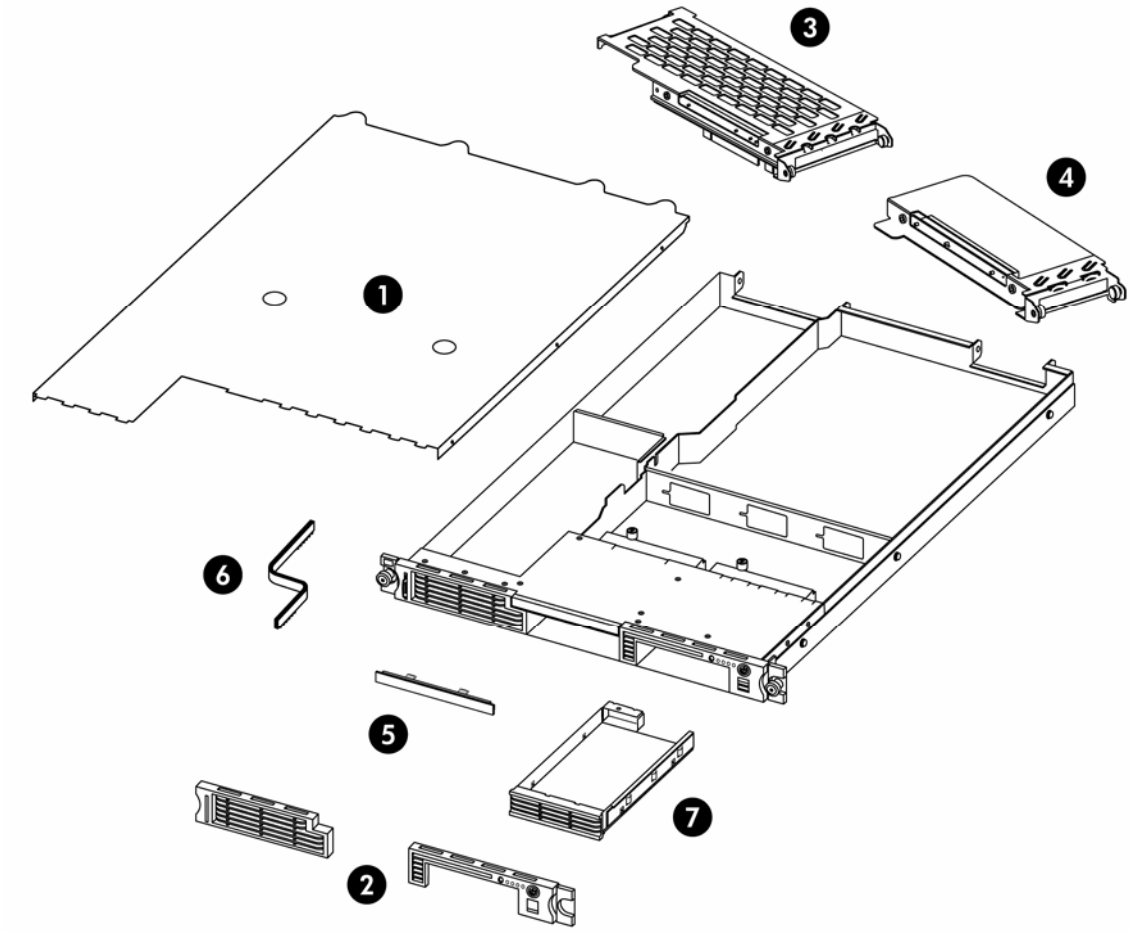

Table 1 Mechanical spare parts list

Item	Description	Spare Part Number	Customer Self Repair
1	Top cover	434437-001	Mandatory
2	Front bezel	434423-001	Mandatory
3	Full-sized riser board assembly	434459-001	Mandatory
4	Low-profile riser board assembly	434458-001	Mandatory
5	Optical drive bay bezel	434436-001	Mandatory
6	Air baffle	434424-001	Mandatory
7	Non-hot-plug hard disk drive (HDD) carrier	434425-001	Mandatory

System components exploded view

Figure 2 System components exploded view

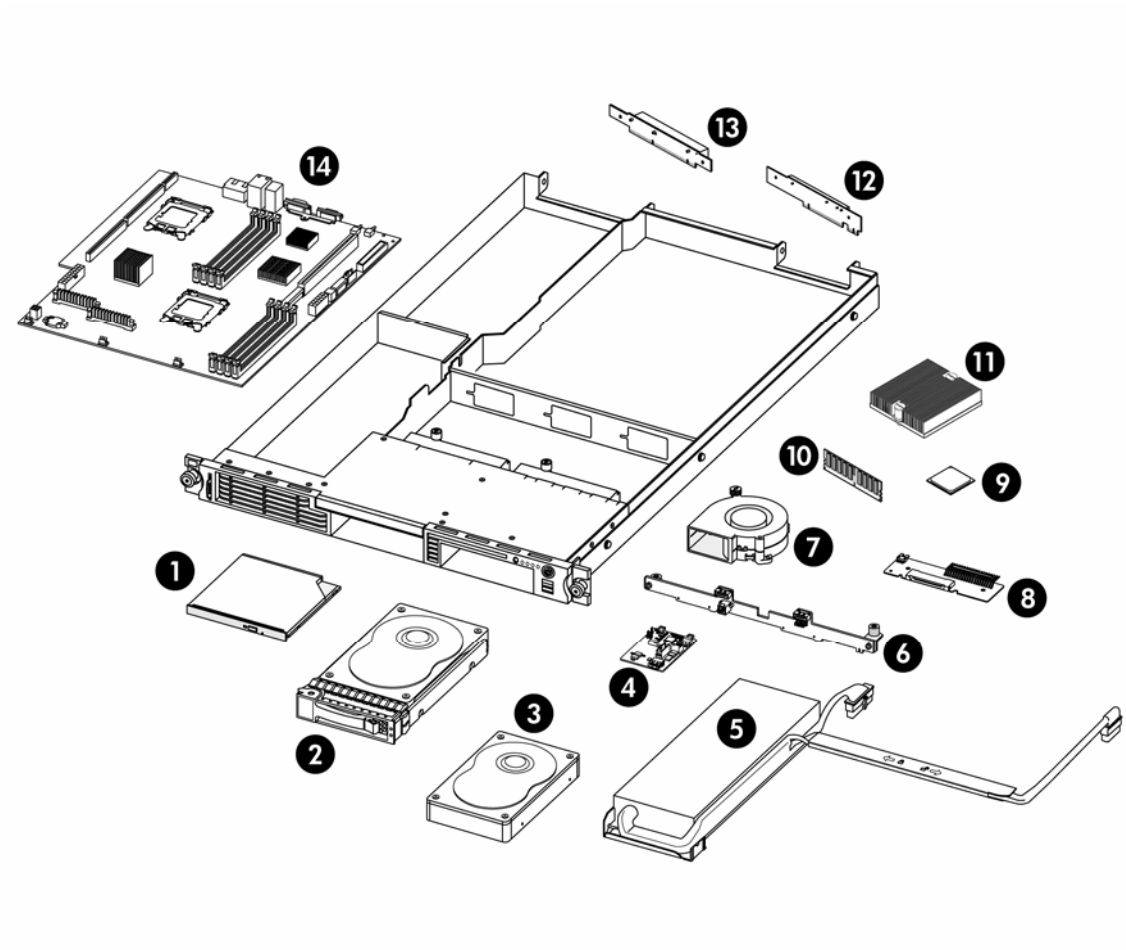

Table 2 System components spare parts list

Item	Description	Spare Part Number	Customer Self Repair
1	Optical drive		Mandatory
	a) DVD ROM drive	436951-001	
	b) DVD/CD RW combo drive	436952-001	
2	Hot-plug SAS hard drive		Mandatory
	a) 36 GB	376593-001	
	b) 72 GB	376594-001	
	c) 146 GB	376595-001	
	d) 300 GB	432147-001	
3	Non-hot-plug SATA hard drive		Mandatory
	a) 80 GB	373311-001	
	b) 160 GB	399968-001	
	c) 250 GB	399969-001	
	d) 500 GB	404654-001	
	e) 750 GB	397377-001	
4	Front panel board	434428-001	Mandatory
5	650 W power supply unit	434418-001	Mandatory
6	Hot-plug SATA/SAS backplane	434432-001	Mandatory
7	System fan module	434417-001	Mandatory
8	Optical drive docking board	434430-001	Mandatory

Table 2 System components spare parts list

Item	Description	Spare Part Number	Customer Self Repair
9	Processor		Optional
	a) 1.8 GHz, 68W AMD Opteron	434949-001	
	b) 1.8 GHz, 95W AMD Opteron	419473-001	
	c) 2.2 GHz, 68W AMD Opteron	419477-001	
	d) 2.4 GHz, 68W AMD Opteron	419479-001	
	e) 2.4 GHz, 95W AMD Opteron	419478-001	
	f) 2.6 GHz, 95 W AMD Opteron	419480-001	
	g) 2.8 GHz, 95 W AMD Opteron	439749-001	
10	Memory		Mandatory
	a) 512 MB PC2-5300 DIMM	416355-001	
	b) 1 GB MB PC2-5300 DIMM	416356-001	
	c) 2 GB MB PC2-5300 DIMM	416357-001	
11	Processor heat sink	434433-001	Optional
12	Low-profile riser board		Mandatory
	a) PCI Express x4 riser board	434429-001	
	b) PCI-X riser board	434434-001	
13	Full-sized riser board		Mandatory
	a) PCI Express x16 riser board	434431-001	
	b) HTX riser board	434435-001	
14	System board	434426-001	Optional
	PCI-X SATA/SAS controller board	403053-001	Mandatory
	IDE data cable	434421-001	Mandatory
	SATA data cable (long)	434461-001	Mandatory
	SATA data cable (short)	434462-001	Mandatory
	SAS cable assembly	385840-001	Mandatory
	Front panel board LED cable assembly	434420-001	Mandatory
	Front panel USB port 2.0 cable assembly	434419-001	Mandatory
	Drive power cable assembly (non-hot-plug)	436538-001	Mandatory
	Drive power cable assembly (hot-plug)	436539-001	Mandatory
	3V 200-mAh internal lithium battery for system board	234556-001	Mandatory

HP contact information

For the name of the nearest HP authorized reseller:

- In the United States, call 1-800-345-1518.
- In Canada, call 1-800-263-5868.
- In other locations, refer to the HP website at **www.hp.com**.

For HP technical support:

- In North America:
  - Call 1-800-HP-INVENT (1-800-474-6836). This service is available 24 hours a day, 7 days a week. For continuous quality improvement, calls may be recorded or monitored.
  - If you have purchased a Care Pack (service upgrade), call 1-800-633-3600. For more information about Care Packs, refer to the HP website at **www.hp.com**.
- Outside North America, call the nearest HP Technical Support Phone Center. For telephone numbers for worldwide Technical Support Centers, refer to the HP website at **www.hp.com**.

Before you contact HP

Be sure to have the following information available before you call HP:

- Technical support registration number (if applicable)

- Product serial number
- Product model name and number
- Applicable error messages
- Add-on boards or hardware
- Third-party hardware or software
- Operating system type and revision level

Removal and replacement procedures

This chapter provides subassembly and module-level removal and replacement procedures for the HP ProLiant DL145 Generation 3 server.

Review the specifications of a new component before installing it to make sure it is compatible with the server. When you integrate new components into the system, record its model and serial number and any other pertinent information for future reference. After completing any removal or replacement procedure, run the diagnostics program to verify that all components operate properly.

Hardware configuration tools

When performing any hardware configuration procedure, you may need the following tools:

- T-15 Torx screwdriver
- Flat-blade screwdriver
- L-shaped wrench (ships with the server)

The following references and software tools may also be used:

- HP ProLiant DL145 Generation 3 Server Support CD
- IPMI Event Log
- Diagnostics software

NOTE: The figures used in this chapter to illustrate procedural steps are labeled numerically (1, 2, 3, and so on). When these figures are used in substep items, the alphabetically labeled instructions correspond to the numbered labels on the related figure (label 1 corresponds to step a, label 2 corresponds to step b, and so on).

The procedures described in this chapter assume that the server is out of the rack and is positioned on a flat, stable surface.

Hardware configuration warnings

Read the following sections before performing any servicing or troubleshooting procedure.

WARNING! Only authorized technicians trained by HP should attempt to repair this equipment. Because of the complexity of the individual boards and subassemblies, no one should attempt to make repairs at the component level or to make modifications to any printed wiring board. Improper repairs can create a safety hazard.

CAUTION: Whenever installing hardware or performing maintenance procedures requiring access to internal components, it is recommended that all server data be backed up to avoid loss.

Symbols on equipment

These symbols may be located on equipment in areas where hazardous conditions may exist.

WARNING! This symbol, in conjunction with any of the following symbols, indicates the presence of a potential hazard. The potential for injury exists if warnings are not observed. Consult your documentation for specific details.

This symbol indicates the presence of hazardous energy circuits or electric shock hazards. Refer all servicing to qualified personnel.

WARNING! To reduce the risk of injury from electric shock hazards, do not open this enclosure. Refer all maintenance, upgrades, and servicing to qualified personnel.

This symbol indicates the presence of electric shock hazards. The area contains no user or field serviceable

parts. Do not open for any reason.

WARNING! To reduce the risk of injury from electric shock hazards, do not open this enclosure.

This symbol on an RJ-45 receptacle indicates a network interface connection.

WARNING! To reduce the risk of electric shock, fire, or damage to the equipment, do not plug telephone or telecommunications connectors into this receptacle.

This symbol indicates the presence of a hot surface or hot component. If this surface is contacted, the potential for injury exists.

WARNING! To reduce the risk of injury from a hot component, allow the surface to cool before touching.

These symbols, on power supplies or systems, indicate that the equipment is supplied by multiple sources of power.

WARNING! To reduce the risk of injury from electric shock, remove all power cords to completely disconnect power from the system.

This symbol indicates that the component exceeds the recommended weight for one individual to handle safely.

WARNING! To reduce the risk of personal injury or damage to the equipment, observe local occupational health and safety requirements and guidelines for manual material handling.

Rack warnings

WARNING! To reduce the risk of personal injury or damage to equipment, always ensure that the rack is adequately stabilized before extending a component outside the rack. A rack may become unstable if more than one component is extended for any reason. Extend only one component at a time.

WARNING! To reduce the risk of personal injury or damage to the equipment, be sure that:

- The leveling jacks are extended to the floor.
- The full weight of the rack rests on the leveling jacks.
- The stabilizers are attached to the rack, if it is a single rack installation.
- The racks are coupled together in multiple rack installations.

WARNING! When installing the server in a Telco rack, make certain that the rack frame is adequately secured to the building structure at the top and bottom.

WARNING! To reduce the risk of personal injury or damage to the equipment, at least two people are needed to safely unload the rack from the pallet. An empty 42U rack weighs 115 kg (253 lb), is more than 2.1 m (7 ft) tall, and may become unstable when being moved on its casters. Do not stand in front of the rack as it rolls down the ramp from the pallet. Handle the rack from both sides.

CAUTION: This ProLiant server is intended for rack-mount operation. The server bezel is made from glossy material. For safety purposes, do not place the server in the visual field of users to prevent any accidents arising from light bouncing off the bezel's surface.

ACHTUNG: Entsprechend der Bildschirmabeitsplatzverordnung, darf das Gerät nicht im Gesichtsfeld des Bedieners aufgestellt werden, da das Gehäuse eine glänzende Front aufweist.

Server warnings and precautions

⚠ **WARNING!** Hazardous voltages are present inside the server. Always disconnect AC power from the server and other associated assemblies while working inside the unit. Serious injury may result if this warning is not observed.

⚠ **WARNING!** To reduce the risk of personal injury from hot surfaces, allow the hot-plug drives and the internal system components to cool before touching them.

⚠ **WARNING!** To reduce the risk of electric shock or damage to the equipment:

- Do not disable the power cord grounding plug. The grounding plug is an important safety feature.
- Plug the power cord into a grounded (earthed) electrical outlet that is easily accessible at all times.
- Disconnect all power cords to completely remove power from the system.

⚠ **CAUTION:** Protect the server from power fluctuations and temporary interruptions with a regulating uninterruptible power supply (UPS). This device protects the hardware from damage caused by power surges and voltage spikes and keeps the system in operation during a power failure.

⚠ **CAUTION:** The server must always be operated with the system top cover closed. Proper cooling is not achieved if the system top cover is removed.

Hardware configuration information

Electrostatic discharge information

Proper packaging and grounding techniques are necessary precautions to prevent damage. To prevent electrostatic damage, observe the following precautions:

- Transport products in static-safe containers such as conductive tubes, bags, or boxes.
- Keep electrostatic-sensitive parts in their containers until they arrive at static-free stations.
- Cover workstations with approved static-dissipating material. Use properly grounded (earthed) tools and equipment and a wrist strap connected to the work surface.
- Keep the work area free of nonconductive materials, such as ordinary plastic assembly aids and foam packing.
- Make sure that you are always properly grounded (earthed) when touching a static-sensitive component or assembly.
- Avoid touching pins, leads, or circuitry.
- Always place drives with the Printed Circuit Board (PCB) assembly-side down.
- Use conductive field service tools.

Pre-installation procedures

Perform the steps below before you open the server or before you remove or replace any component:

⚠ **WARNING!** Failure to properly turn off the server before you open the server or before you start removing or installing hardware components may cause serious damage as well as bodily harm.

1. Turn off the server and all the peripherals connected to it.

   Refer to the "Powering down the server" section on page 12 for detailed instructions on how to completely power down the server.

2. Disconnect the AC power cord from the power supply cable socket located on the server rear panel to eliminate the risk of electrical shock.

3. Remove the top cover by following the procedure described in the "Opening and closing the server" section on page 12.
4. Follow the ESD precautions listed in the "Electrostatic discharge information" section on page 11 when handling a server component.

IMPORTANT: To streamline the configuration process, read through the entire installation and removal procedures first and make sure you understand them before you before you begin.

Post-installation procedures

Perform the steps below after installing or removing a server component:

1. Be sure all components are installed according to the described step-by-step instructions.
2. Check to make sure you have not left loose tools or parts inside the server.
3. Reinstall any expansion boards, riser board assemblies, peripherals, board covers, brackets, and system cables that you have removed.
4. Reinstall the top cover by following the procedure described in the "Opening and closing the server" section on page 12.
5. Connect all external cables and the AC power cord to the system.

   Route the cables properly through the available cable management arrangement.
6. Press the power button on the front panel to turn on the server.

Powering down the server

The server does not completely power down when the power button is pressed. The power button toggles between On and Standby. The standby position removes power from most electronics and the drives, but some internal circuitry remains active. To completely remove all power from the system, disconnect all power cords from the server.

To power down the server:

1. Shut down server as directed by the operating system documentation.
2. Press the power button to toggle to Standby.

   This places the server in standby mode and changes the power LED indicator to amber. In this mode, the main power supply output is disabled. Standby does not completely disable or remove power from the system.
3. Disconnect the AC power cord from the AC outlet and then from the server.
4. Be sure that the power LED indicator is turned off and that the fan noise has stopped.
5. Disconnect all external peripheral devices from the server.

Opening and closing the server

The top cover is detachable. You need to remove this cover before you can remove or replace a server component.

To open the server:

1. Perform steps 1 and 2 of the pre-installation procedures on page 11.
2. Detach the top cover from the chassis:
   a. Loosen the captive screw on the rear panel.

      To loosen the screw, HP recommends using the L-shaped wrench that ships with the server.
   b. Slide the cover approximately 1.25 cm (0.5 in) toward the rear of the unit, then lift the cover away from the chassis.

      You can use the two circular grips on the top cover to help you slide the cover more easily.

Figure 3 Removing the top cover

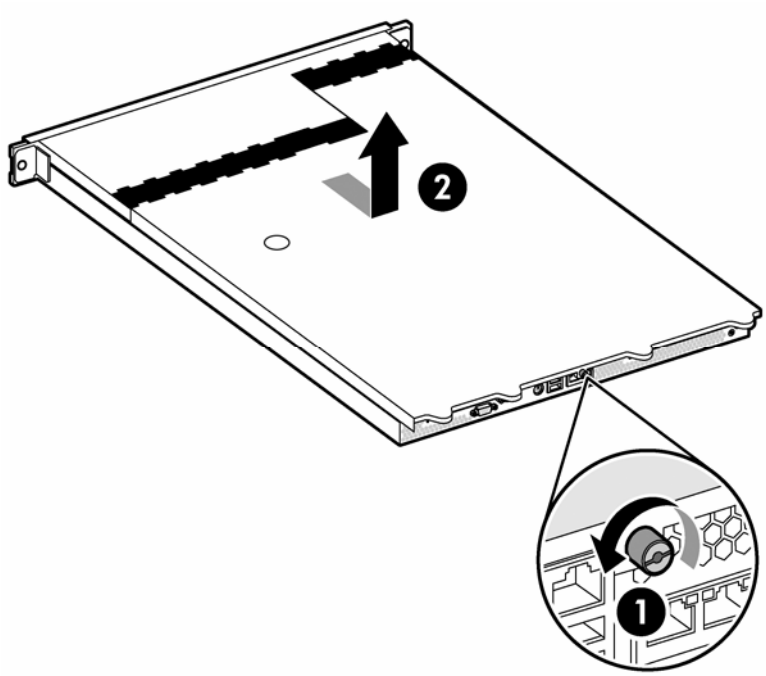

3. Place the top cover in a safe place for reinstallation later.

To reinstall the top cover:

1. Perform steps 1 to 3 of the post-installation procedures described on page 12.
2. Reinstall the top cover:
   a. Place the cover on the chassis approximately 1.25 cm (0.5 in) toward the rear of the unit, then slide the cover forward into place.
   b. Tighten the captive screw on the rear panel.

      To tighten the screw, HP recommends using the L-shaped wrench that ships with the server.

Figure 4 Reinstalling the top cover

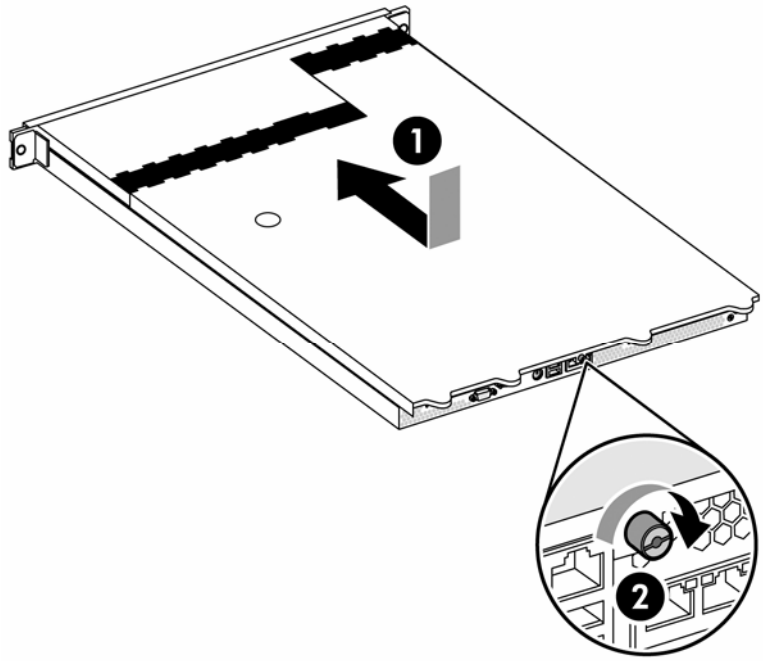

3. Perform steps 5 and 6 of the post-installation procedure on page 12.

Drive bay configuration

The server supports three drive bays — two drive bays for hard disk drives and one drive bay for a 9.5-mm optical drive.

Go to the HP website at **http://www.hp.com/** and refer to the options list for this server model for the latest information on supported hard drives and optical drives.

Figure 5 Drive bay configuration

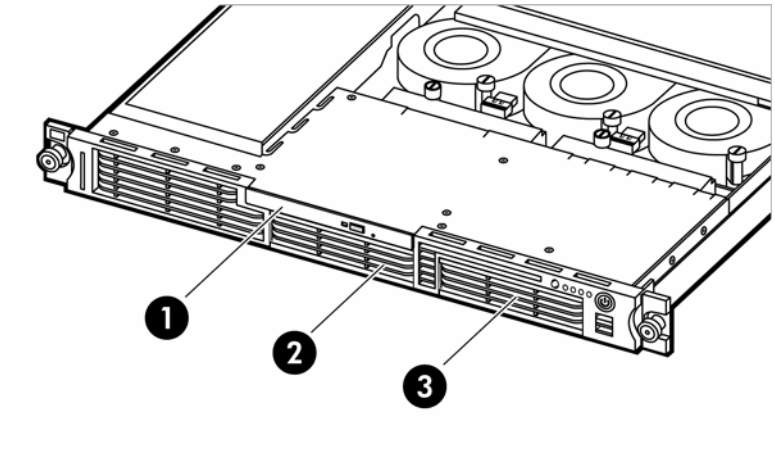

Item	Description
1	Optical drive bay
2	Hard disk drive (HDD) bay 1
3	HDD bay 2

Cable routing diagrams

Figure 6 to Figure 8 show the cable routing for the optical drive as well as the SATA and SAS hard drives. For detailed cable routing procedures for each type of drive, refer to the corresponding steps in the drive configuration sections later in this chapter.

CAUTION: Route the drive cables neatly. If possible, follow the pre-installed cable bundles in the chassis. The cables should be routed in a position where they will not be pinched or crimped by the top cover, and they should not hamper proper airflow inside the chassis.

Optical drive cable routing

Figure 6 Optical drive cable routing

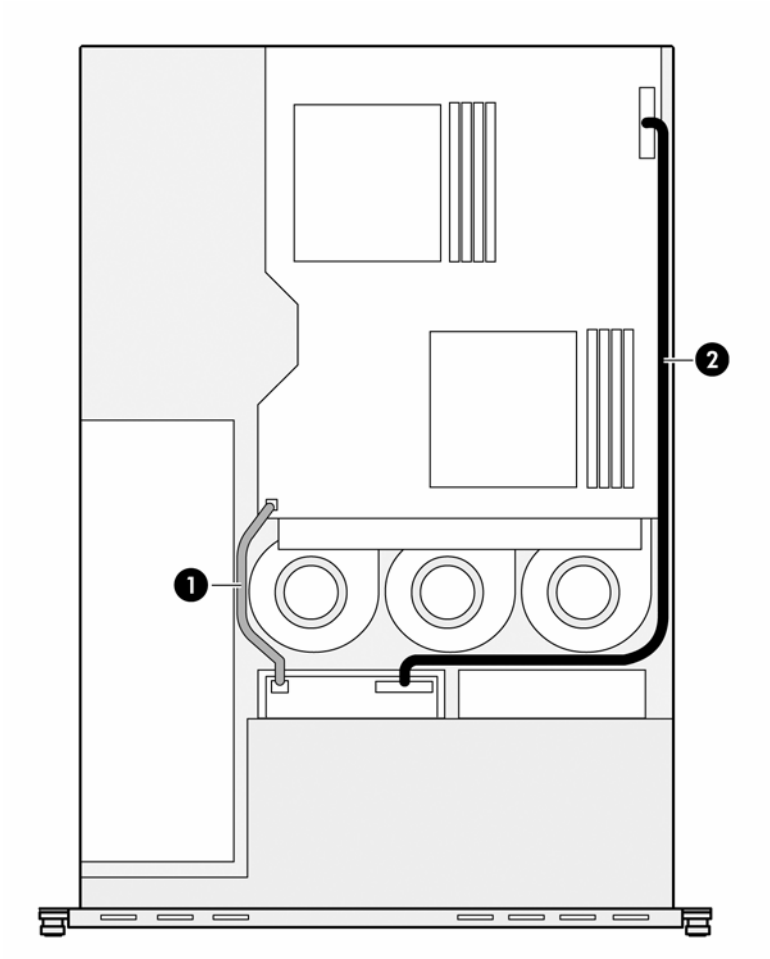

Item	Description	Connections
1	Drive power cable	• P41 on the system board • Power connector on the optical drive docking board • Power connectors on any installed non-hot-plug SATA hard drives or the hot-plug SATA/SAS backplane, if installed
2	IDE data cable	• J7 on the system board • Data connector on the optical drive docking board

Hard drive cable routing

Non-hot-plug SATA hard drive cable routing

Figure 7 Non-hot-plug SATA hard drive cable routing

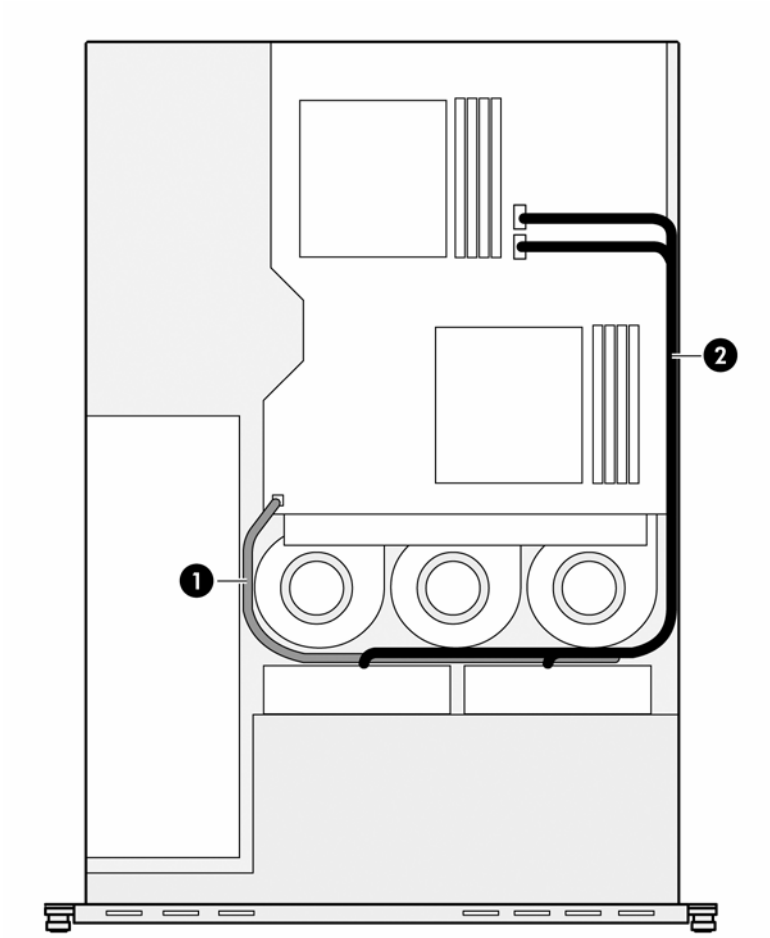

Item	Description	Connections
1	Drive power cable	• P41 on the system board • Power connector on each installed non-hot-plug SATA hard drive • Power connector on the optical drive docking board, if installed
2	SATA data cables	• P19 or P23 on the system board • Data connector on each installed non-hot-plug SATA hard drive

Hot-plug SATA/SAS hard drive cable routing

Figure 8 shows the hot-plug hard drive cable routing when the server has a low-profile PCI Express x4 or PCI-X hot-plug SATA/SAS controller board installed. Figure 9 shows the hard drive cable routing when the server has a full-sized PCI Express x16 hot-plug SATA/SAS controller board installed.

Figure 8 Hot-plug SATA/SAS hard drive cable routing with a low-profile controller board

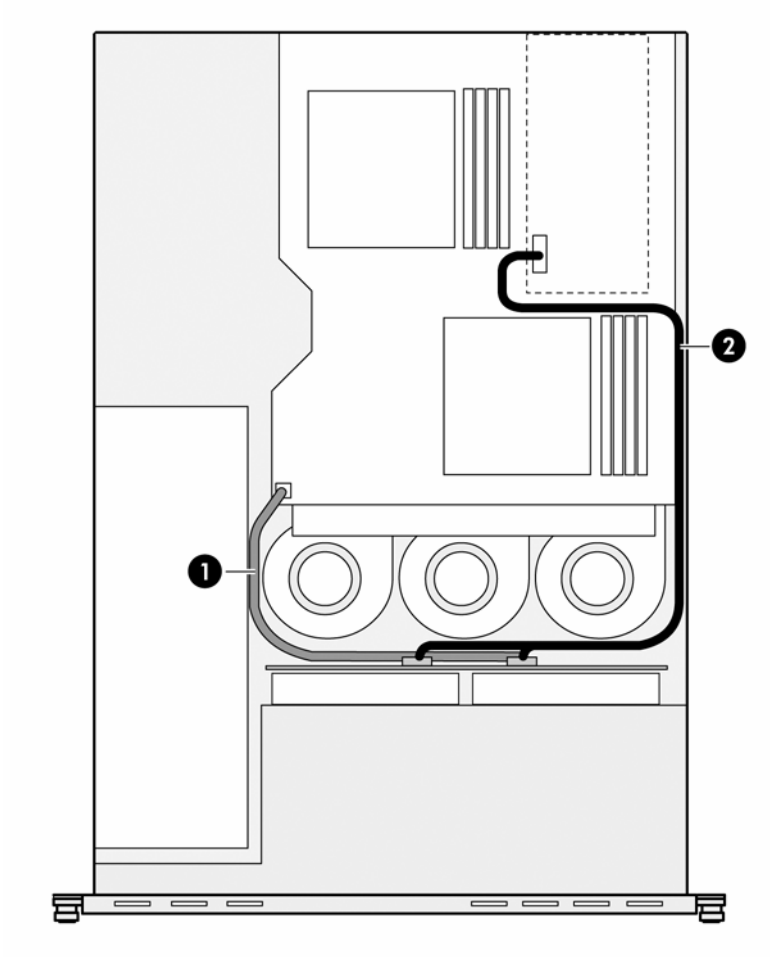

Item	Description	Connections
1	Hot-plug SATA/SAS backplane power cable	• P41 on the system board • Power connectors on the hot-plug SATA/SAS backplane • Power connector on the optical drive docking board, if installed
2	Hot-plug SATA/SAS cable assembly	• Data connector on the hot-plug SATA/SAS controller board • Data connectors and the LED connector on the hot -plug SATA/SAS backplane

Figure 9 Hot-plug SATA/SAS hard drive cable routing with a full-sized controller board

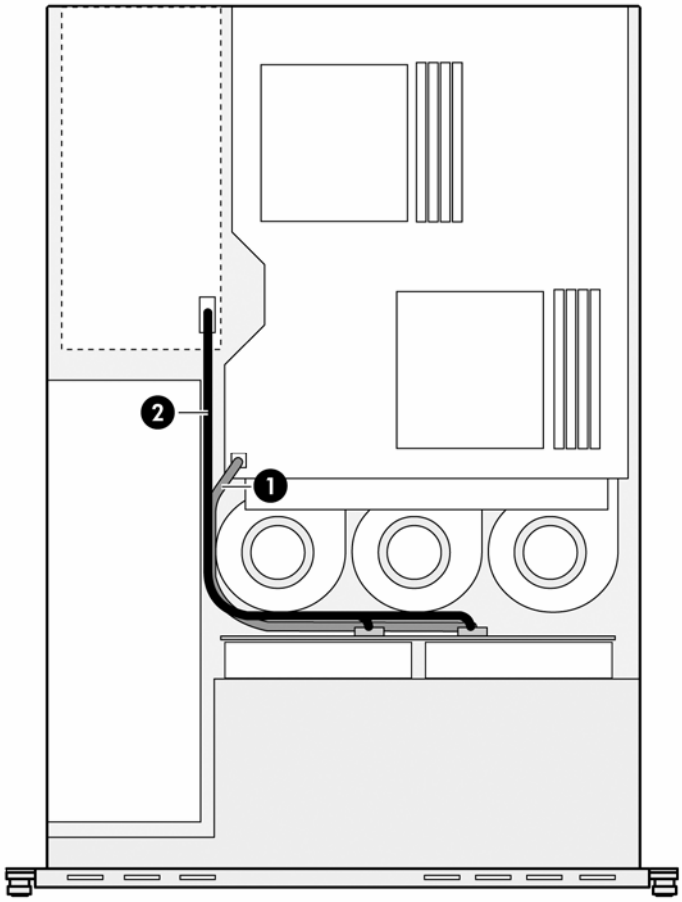

Item	Description	Connections
1	Hot-plug SATA/SAS backplane power cable	• P41 on the system board • Power connectors on the hot-plug SATA/SAS backplane • Power connector on the optical drive docking board, if installed
2	Hot-plug SATA/SAS cable assembly	• Data connector on the hot-plug SATA/SAS controller board • Data connectors and the LED connector on the hot-plug SATA/SAS backplane

Optical drive

The optical drive bay supports the installation of a 9.5-mm CD-ROM or CD/DVD combo drive. Go to the HP website at **http://www.hp.com/** and refer to the options list for this server model for a list of supported optical drives.

To install a CD-ROM or CD/DVD combo drive:

1. Perform the pre-installation procedures described on page 11.
2. Remove the optical drive bay bezel from the chassis:
   a. Push down on the two bezel tabs above the optical drive bay on the non-removable section of the chassis top cover.
   b. Remove the bezel from the optical drive bay.
   Store the bezel for reassembly later.

CAUTION: Do not discard the bezel. If the optical drive is removed in the future, this bezel must be reinstalled in the chassis for the proper cooling of the system.

Figure 10 Removing the optical drive bay bezel

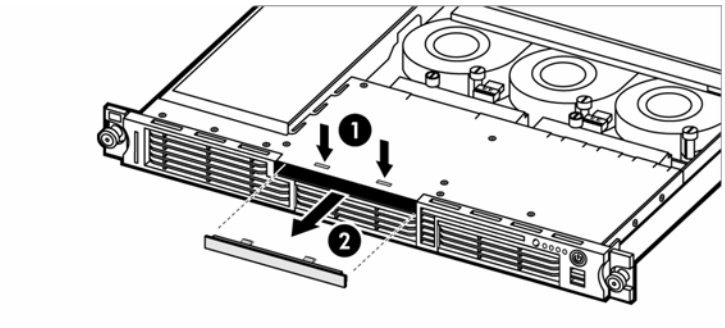

3. Install the optical drive docking board:
   a. Hold the docking board at a slight angle to the chassis, then carefully slide it into place under the non-removable section of the chassis top cover and on top of the optical drive bay.

      Be sure not to scratch any docking board components on the non-removable section of the chassis top cover or on the captive thumbscrew on HDD bay 1 beneath the optical drive bay.
   b. Attach the docking board to the chassis with the two screws included in the option kit.

Figure 11 Installing the optical drive docking board

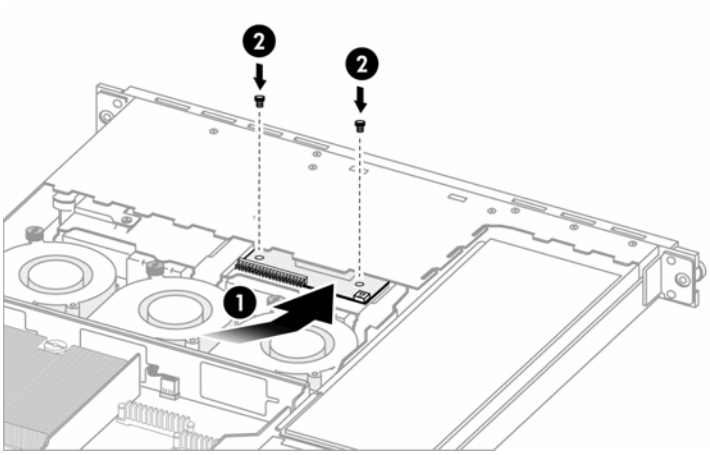

4. Connect the IDE data cable and the small drive power cable to the docking board.

   Both cables are already connected to the system board and routed to the optical drive bay within the chassis.

Figure 12 Connecting the optical drive cables

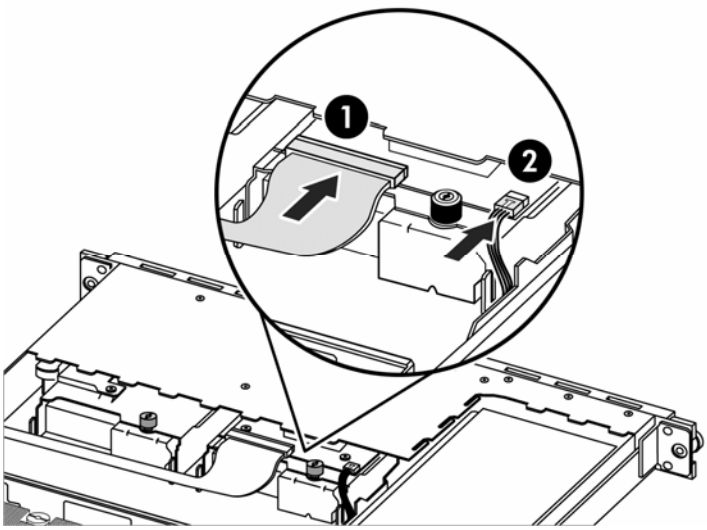

5. Remove the new optical drive from its protective packaging.
6. Align the optical drive with the optical drive bay, then push the drive fully into the drive bay.

   Make sure the drive is not upside down.

Figure 13 Installing an optical drive

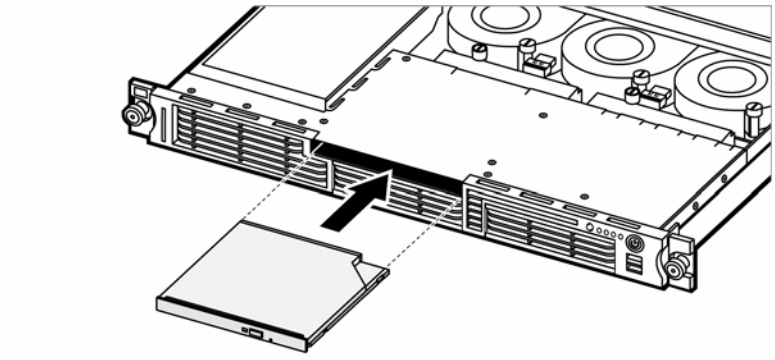

7. Perform the post-installation procedures described on page 12.

Hard drives

The server has two HDD bays that support both non-hot-plug SATA hard drives and hot-plug SATA or SAS hard drives. You can add a hard drive to an empty HDD bay by installing an appropriate drive option; servers configured as non-hot-plug systems cannot use hot-plug hard drives, and servers configured as hot-plug systems cannot use non-hot-plug hard drives.

The non-hot-plug SATA drive options include only the hard drive. Install these drive options using the HDD carriers and mounting screws included with a server configured for non-hot-plug drives.

The hot-plug SATA and SAS drive options are pre-installed in hot-plug HDD carriers. Use these hot-plug drive assemblies to replace any installed hardware in an HDD bay of a server configured for hot-plug drives. A hot-plug HDD bay may contain a blank drive carrier or a hot-plug drive assembly.

Go to the HP website at **http://www.hp.com/** and refer to the options list for this server model for the latest information on supported hard drives.

Hard drive installation guidelines

Observe the following important guidelines when installing hard drives:

- Install only hard drive models specified for your ProLiant server. Installing unsupported hard drives may damage the system by consuming power and generating heat in excess of the operating tolerance of the server. This condition may result in a loss of system and/or data integrity.
- Install non-hot-plug SATA hard drives in the HDD carriers included with the server. Use four of the six HDD screws pre-installed in each of the two HDD carriers.

Figure 14 Pre-installed screw locations in the non-hot-plug HDD carrier

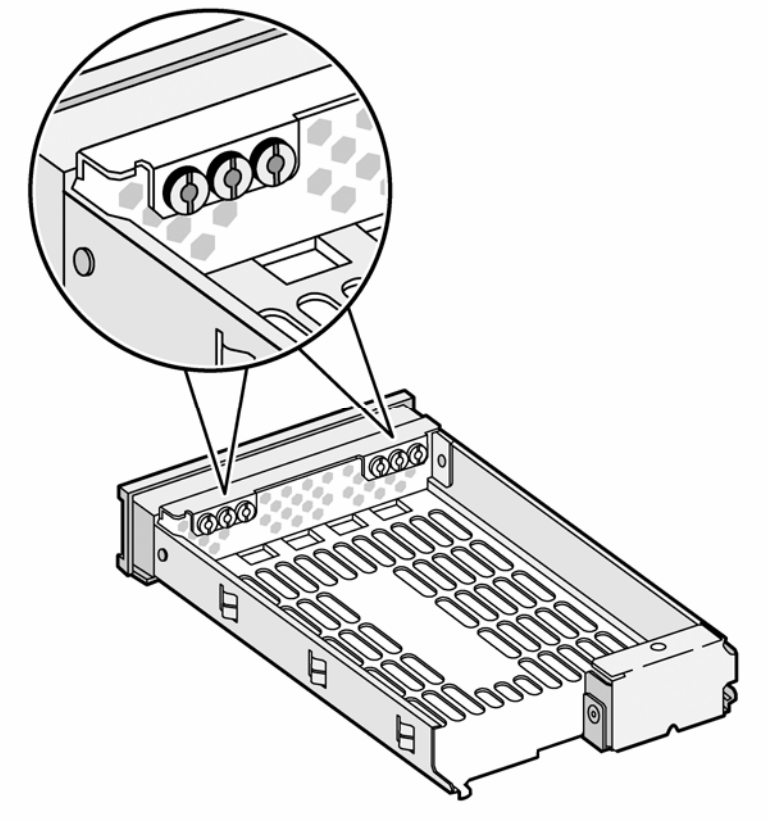

- Hard drives installed in the server are labeled as drive 1 and drive 2 from left to right when viewed from the front of the server.

Figure 15 HDD bay locations

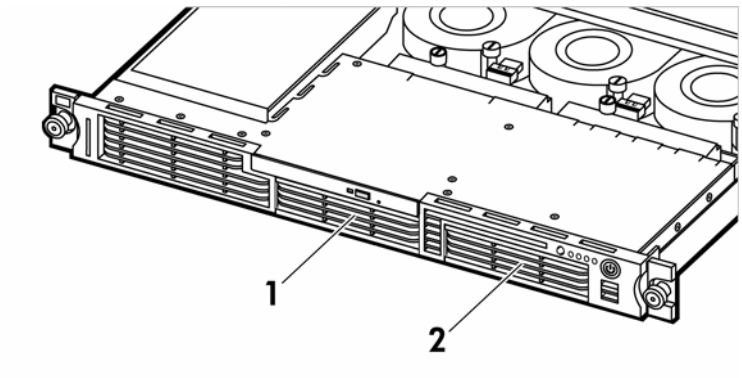

Removing a non-hot-plug SATA hard drive

If you intend to replace a non-hot-plug SATA hard drive with another non-hot-plug SATA hard drive, use the HDD carrier and screws you remove from the old drive to install the new drive.

To remove a non-hot-plug SATA hard drive:

1. Perform the pre-installation procedures described on page 11.
2. Disconnect the data and power cables from the rear of the hard drive.
3. Remove the HDD carrier from the chassis:
   a. Loosen the screw that secures the HDD carrier to the chassis.
   b. Push the HDD carrier toward the front of the chassis, then slide it out completely.

Figure 16 Removing a non-hot-plug SATA hard drive from the chassis

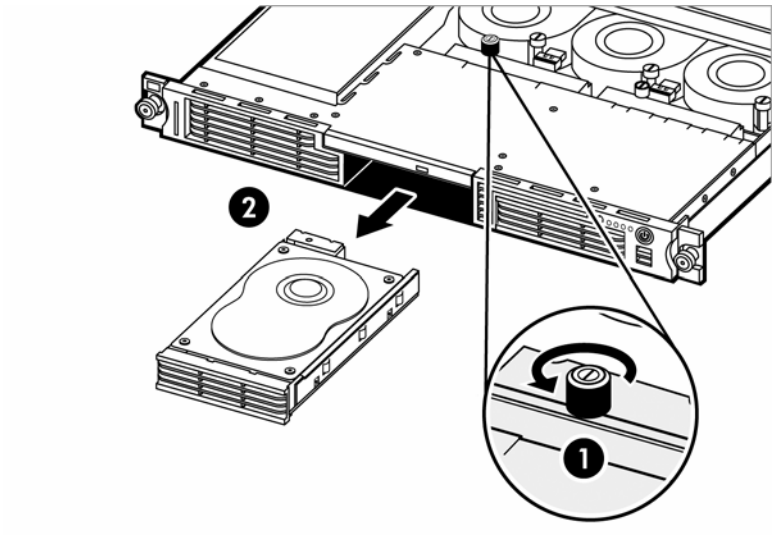

4. Remove the hard drive from the HDD carrier:
   a. Remove the four mounting screws that secure the hard drive to the HDD carrier.
   b. Remove the hard drive from the HDD carrier.

Figure 17 Removing a non-hot-plug SATA hard drive from the HDD carrier

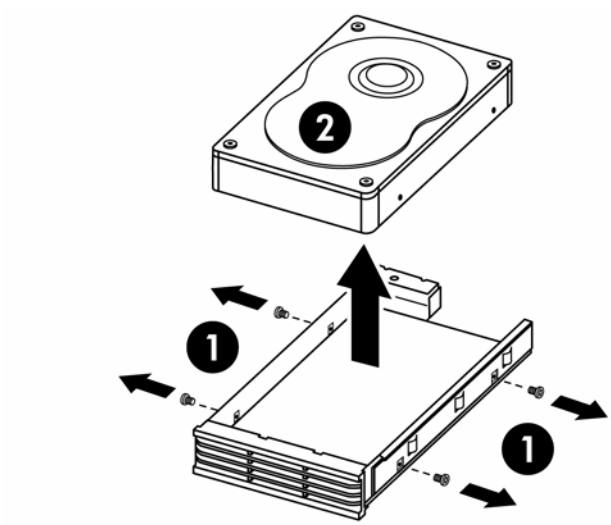

IMPORTANT: If you remove a hard drive and do not plan to install a new one immediately, you must reinstall the mounting screws at their pre-installed location for future use, then reinstall the HDD carrier in the chassis to ensure the proper cooling of the system. Then perform the post-installation procedures described on page 12.

Installing a non-hot-plug SATA hard drive

1. Perform the pre-installation procedures described on page 11.
2. Select a drive bay for the new hard drive.

   If the drive bay is occupied, remove the currently installed drive by following the procedures described in the "Removing a non-hot-plug SATA hard drive" section on page 21.

   If the drive bay is empty, perform step 3 in the "Removing a non-hot-plug SATA hard drive" section described on page 21, then remove four mounting screws from the HDD carrier. You will use these screws to install the new drive.
3. Install the new hard drive in the HDD carrier:
   a. Align the new hard drive on the HDD carrier.

      If you are installing the new drive in a previously occupied drive bay, use the HDD carrier and mounting screws you removed from the old drive.

If you are installing the new drive in an empty drive bay, use the HDD carrier and mounting screws you removed from that drive bay.

b. Secure the hard drive to the HDD carrier with the four mounting screws.

c. Slide the hard drive assembly into the chassis.

Figure 18 Installing a non-hot-plug SATA hard drive in the HDD carrier and chassis

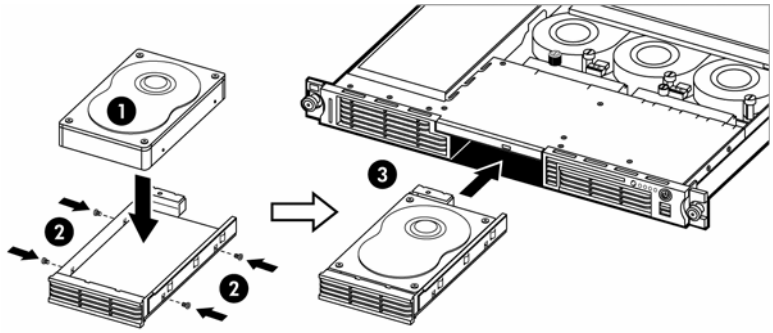

CAUTION: Route the SATA data cables neatly. Follow the bundle of cables along the right side of the chassis. The cables should be routed in a position where they will not be pinched or crimped by the top cover, and they should not hamper proper airflow inside the chassis.

4. Route the SATA data cable:

a. Connect the SATA data cable to an open SATA connector on the system board (P19 or P23) if it is not already connected.

b. Route the SATA data cable between the processor 2 socket DIMM slots and the PCI Express x4 slot to the right edge of the chassis (as viewed from the front of the server).

c. Route the SATA data cable toward the front of the chassis, following the bundled cables.

d. Route the SATA data cable between the drive bays and the system fans.

5. Connect the SATA data and power cables to their corresponding connectors on the rear of the new drive.

If necessary, you can remove the system fans to allow easier access to the drive connectors. Perform steps 2 to 4 in the "Removing a system fan" section described on page 51 to remove each system fan, then continue with this procedure.

Figure 19 Connecting the SATA data and power cables to a non-hot-plug hard drive

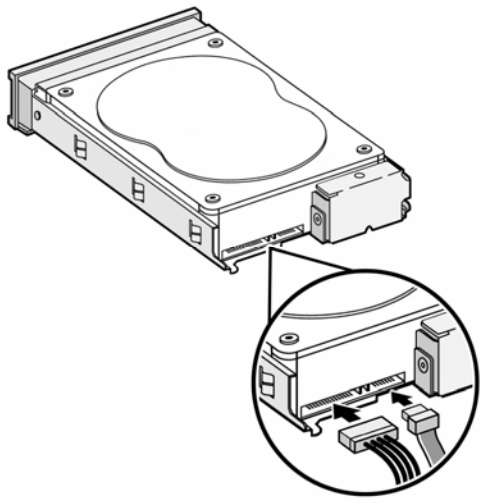

6. Check that all cables are clear of the HDD carrier and are properly routed to their corresponding connectors, then tighten the screw that secures the hard drive assembly to the chassis.

If you removed the system fans in the previous step, perform steps 1 to 3 in the "Installing a system fan" section described on page 53.

7. Perform the post-installation procedures described on page 12.

8. Set up the SATA configuration.

   For detailed procedures, refer to the *Server Support CD* or to the operating system documentation.

Removing a hot-plug SATA/SAS drive assembly

This procedure assumes the hot-plug SATA/SAS backplane is already installed. See the "Installing the hot-plug SATA/SAS backplane" section described on page 26 for more details.

To remove a hot-plug SATA/SAS drive assembly from the server:

1. Push the button on the front of the HDD carrier you want to remove to release the carrier latch, then pull the carrier latch to its open position.
2. Remove the hot-plug drive assembly from the chassis.

Installing a hot-plug SATA/SAS drive assembly

This procedure assumes the hot-plug SATA/SAS backplane is already installed. See the "Installing the hot-plug SATA/SAS backplane" section described on page 26 for more details.

To install a hot-plug SATA/SAS drive assembly in the server:

1. Prepare the HDD bay for installation:
   - If you are replacing a currently installed hot-plug drive with a hot-plug drive option pre-installed in an HDD carrier, perform the procedure in the "Removing a hot-plug SATA/SAS drive assembly" section on page 24.

     Because the new hot-plug hard drive is pre-installed in an HDD carrier, you do not need to reuse the HDD carrier that you are removing from the server.
   - If you are replacing a currently installed hot-plug drive with a SATA or SAS drive that is not pre-installed in an HDD carrier, perform the procedure in the "Replacing a hot-plug SATA or SAS hard drive" section on page 25.
   - If the HDD bay contains a blank drive carrier, squeeze the two center tabs on the bezel toward each other, then remove the carrier from the chassis.
2. If the carrier latch on the HDD carrier you want to install is not already open, push the button on the front of the HDD carrier, then pull the carrier latch to its open position.
3. Align the hot-plug drive assembly with the open drive bay and push the assembly into the drive bay until it stops.

Figure 20 Installing a hot-plug SATA/SAS drive assembly

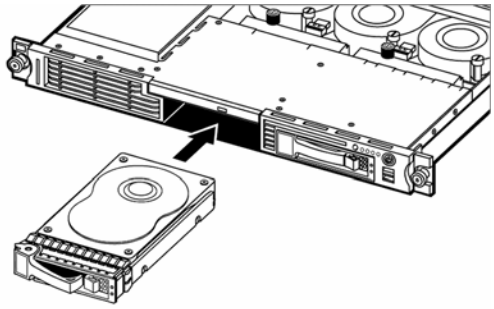

The metal tab at the front of the HDD bay should fit inside the notch in the hinge of the carrier latch.

Figure 21 Aligning the latch on a hot-plug SATA/SAS drive assembly

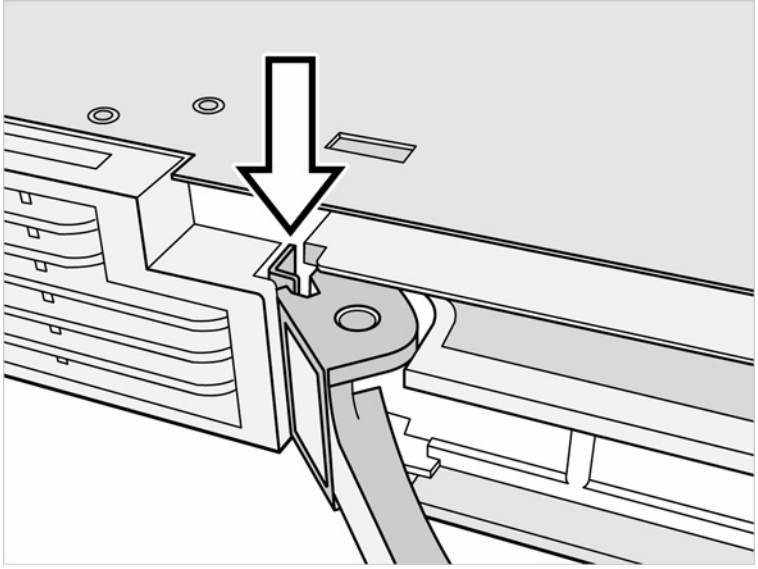

4. Press the HDD carrier latch inward until it clicks.

   The latch should pull the hot-plug drive assembly fully into the chassis. The carrier latch should pull against the metal tab on the HDD bay only, not on the front bezel on the chassis.

Figure 22 Closing the latch on a hot-plug SATA/SAS drive assembly

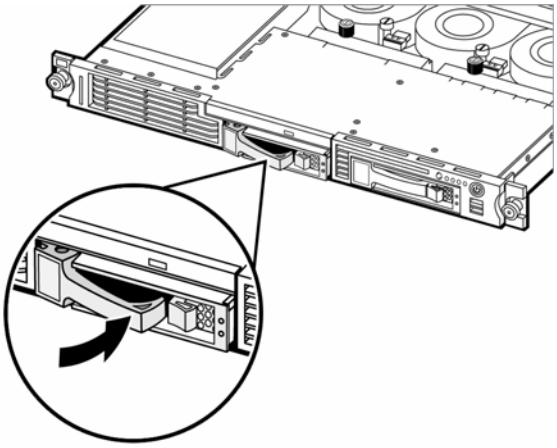

Replacing a hot-plug SATA or SAS hard drive

This procedure assumes the hot-plug SATA/SAS backplane is already installed. See the "Installing the hot-plug SATA/SAS backplane" section described on page 26 for more details.

To replace a hot-plug SATA or SAS hard drive:

1. Perform the procedure in the "Removing a hot-plug SATA/SAS drive assembly" section on page 24 to remove the appropriate hot-plug drive assembly.
2. Remove the hard drive from the hot-plug HDD carrier:
   - **a.** Remove the four mounting screws that secure the hard drive to the hot-plug HDD carrier.
   - **b.** Remove the hard drive from the hot-plug HDD carrier.
3. Install the new drive in the hot-plug HDD carrier:
   - **a.** Align the hard drive in the HDD carrier.
   - **b.** Secure the hard drive to the HDD carrier with the four mounting screws.

Figure 23 Installing a SATA or SAS hard drive in the hot-plug HDD carrier

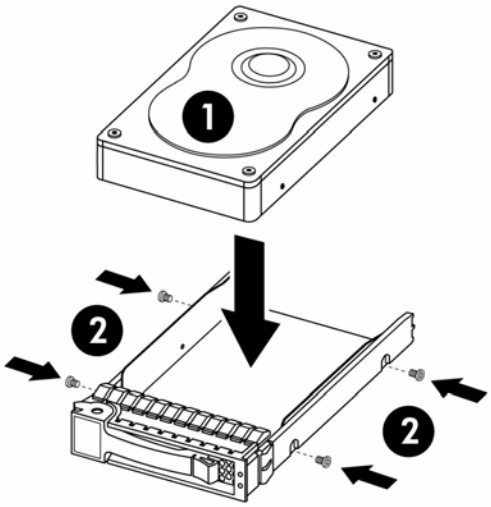

4. Perform the procedure in the "Installing a hot-plug SATA/SAS drive assembly" section on page 24 to reinstall the hot-plug drive assembly in the chassis.

Installing the hot-plug SATA/SAS backplane

To enable hot-plug SATA/SAS drive functionality, you must install a hot-plug SATA/SAS controller board and cabling in addition to the hot-plug backplane. See the "Installing a hot-plug SATA/SAS controller board" section on page 28 for more details.

To install the hot-plug SATA/SAS backplane board:

1. Perform the pre-installation procedures described on page 11.
2. Perform steps 2 to 4 in the "Removing a system fan" section described on page 51 to remove each system fan.
3. Disconnect the drive power and SATA data cables:
   a. Disconnect the power cable from each hard drive installed in the server.
   b. Disconnect the power cable from the optical drive docking board, if installed.

Figure 24 Disconnecting the optical drive power cable

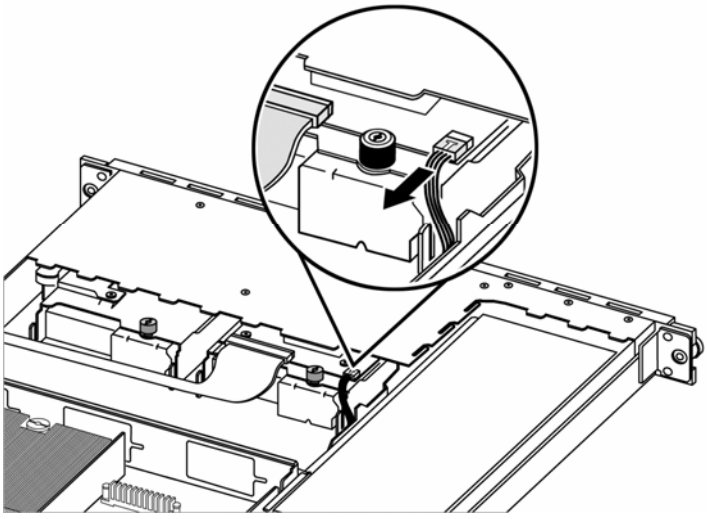

   c. Disconnect the drive power cable from the connector on the system board (P41).
   d. Disconnect all SATA data cables from the hard drives and at the system board connectors (P19 and P23).
4. Perform step 3 of the "Removing a non-hot-plug SATA hard drive" section described on page 21 for each HDD bay to remove both non-hot-plug HDD carriers from the chassis.
5. Install the hot-plug backplane:

a. Align the hot-plug backplane between the drive bays and the system fans.
   The data cable connectors on the backplane should face the rear of the chassis.

b. Attach the backplane to the chassis with the screws on each end.

Figure 25 Installing the hot-plug backplane

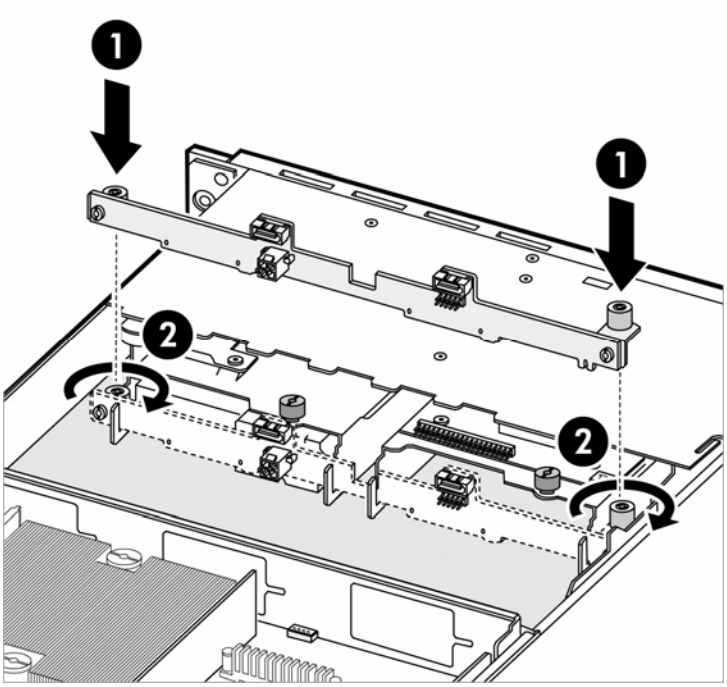

6. Connect and route the new drive power cable included with the option kit:

NOTE: Do not reuse the power cable you removed in step 3.

a. Connect the square 4-pin end of the drive power cable to the drive power connector on the system board (P41).
b. Route the power cable between the drive bays and the system fan locations.
c. Connect the small power connector to the optical drive docking board, if installed.
d. Connect the square 4-pin power connector to the hot-plug backplane.

Figure 26 Connecting the power connector to the hot-plug backplane

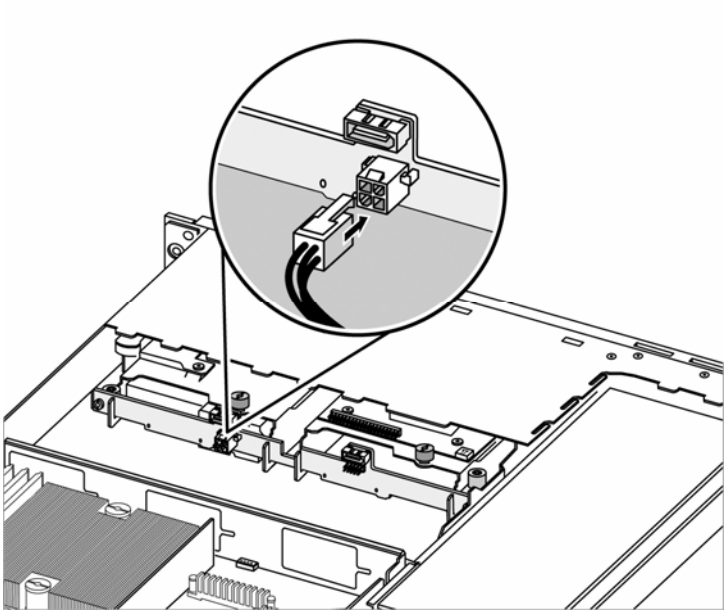

7. Perform steps 1 to 3 in the "Installing a system fan" section described on page 53 to reinstall the three system fans you removed earlier.

8. Perform the post-installation procedures described on page 12.

Installing a hot-plug SATA/SAS controller board

To enable hot-plug SATA/SAS drive functionality, you must install the hot-plug SATA/SAS backplane in addition to a hot-plug SATA/SAS controller board and cabling. This procedure assumes the backplane is already installed. See the "Installing the hot-plug SATA/SAS backplane" section described on page 26 for more details.

To install a hot-plug SATA/SAS controller board:

1. Perform the procedure in the "Removing a riser board assembly" section on page 42 to remove the appropriate riser board assembly.

   If the hot-plug controller board you want to install is a PCI-X or PCI Express x4 board, remove the low-profile assembly. If the hot-plug controller board you want to install is a PCI Express x16 board, remove the full-sized assembly.

2. Prepare the assembly:
   - If no riser board is installed in the assembly, perform the procedure in the "Installing a riser board" section on page 45 to install the correct riser board for the controller board you want to install.
   - If the riser board installed in the assembly is not the correct type, perform the procedures in the "Removing a riser board" section on page 43 and the "Installing a riser board" section on page 45 to replace the riser board.
   - If the correct riser board is installed in the assembly but an expansion board is installed, perform the procedure in the "Removing an expansion board" section on page 46.
   - If the correct riser board is installed in the assembly and no expansion board is installed, continue to the next step.
3. Perform steps 2 to 6 in the "Installing an expansion board" section described on page 46 to install the hot-plug controller board in the assembly.
4. Connect the wide connector on one end of the hot-plug SATA/SAS cable assembly to the data connector on the hot-plug controller board.
5. Perform step 1 of the "Installing a riser board assembly" section on page 43 to reinstall the assembly in the server.
6. For a low-profile controller board, route the hot-plug SATA/SAS cable assembly as follows:
   a. From the controller board, route the cable assembly between the processor 2 socket DIMM slots and the PCI Express x4 slot to the right edge of the chassis (as viewed from the front of the server).
   b. Route the cable assembly toward the front of the chassis, following the bundled cables.
   c. Route the cable assembly between the drive bays and the system fans.
7. For a full-sized controller board, route the hot-plug SATA/SAS cable assembly as follows:
   a. From the controller board, route the cable assembly toward the front of the server between the power supply and the system fan closest to the power supply.
   b. Route the cable assembly between the drive bays and the system fans.
8. Connect the hot-plug SATA/SAS cable assembly to the hot-plug backplane:
   a. Connect the longer SATA/SAS data cable to the data connector on the backplane farthest from the controller board.
   b. Connect the LED cable to the connector on the backplane beneath the HDD bay 1 data connector.
   c. Connect the shorter SATA/SAS data cable to the data connector on the backplane closest to the controller board.

Figure 27 Connecting the hot-plug SATA/SAS cable assembly to the hot-plug backplane

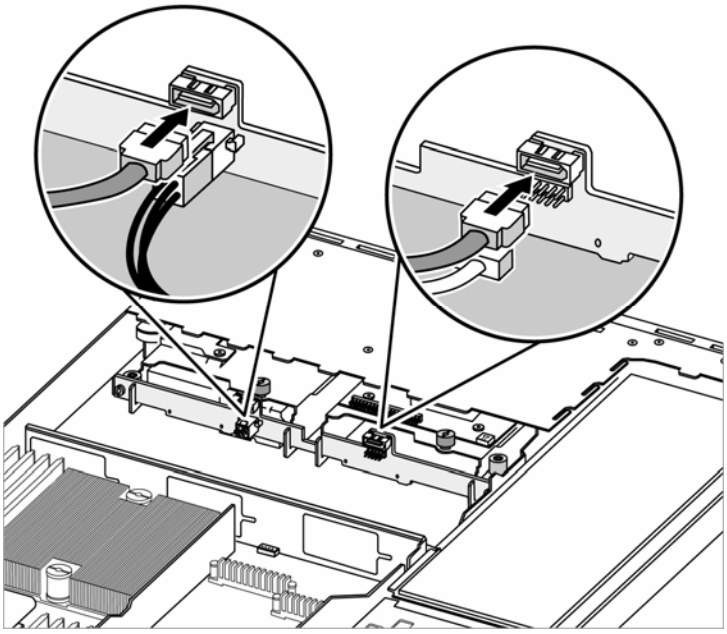

9. Perform the post-installation procedures described on page 12.

System board

Refer to the following sections for instructions about how to remove or replace a system board.

Removing a system board

A server's system board attaches to the floor of the unit and provides connectivity for all inside components.

1. Perform the pre-installation procedures described on page 11.
2. Follow the instructions for *Removing a riser board assembly* on page 42 to remove the full-length riser and the low-profile riser assemblies.
3. Follow the instructions for *Removing a memory module* on page 40 to remove the DIMMs.
4. Remove the air deflector.
   a. Unplug the backplane power cable from the system board.
   b. Pull both air deflector mounting tabs away from each side of the heat sink for CPU1.
   c. Lift the air deflector off of the system board.
5. Unplug the power supply cables, USB cable, OP panel cable, IDE cable, SATA data cables, and fan cables from the system board.
6. Follow the instructions for *Removing a processor* on page 34 to remove the heat sinks, but leave the processors until the new system board is mounted to the chassis.
7. Remove the eleven system board mounting screws.

Figure 28 Removing the mounting screws from the system board

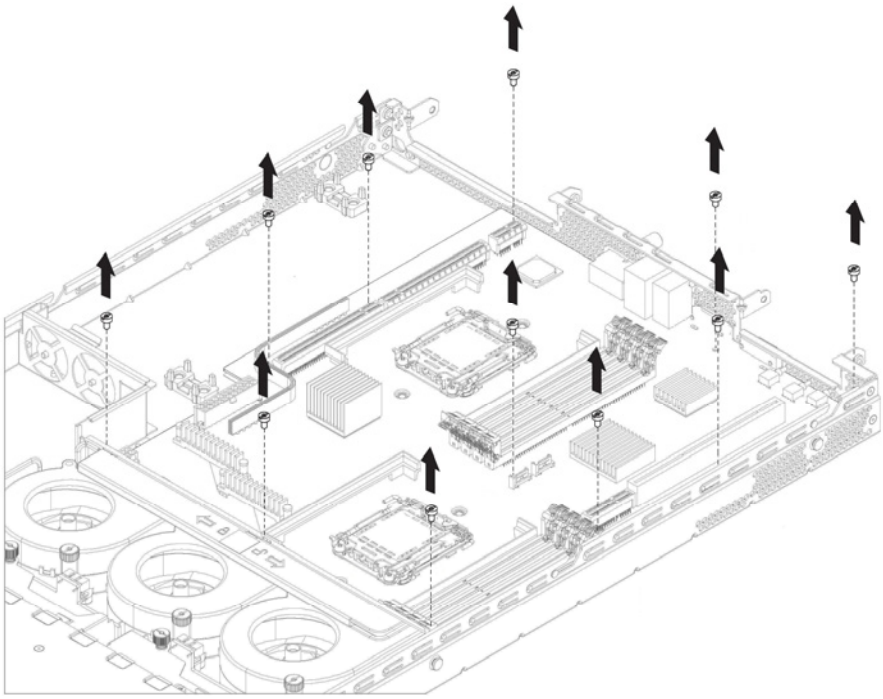

8. Remove the system board by lifting the end closest to the fans enough to clear the fan bracket and gently sliding the system board toward the front of the chassis.

Figure 29 Removing the system board from the chassis

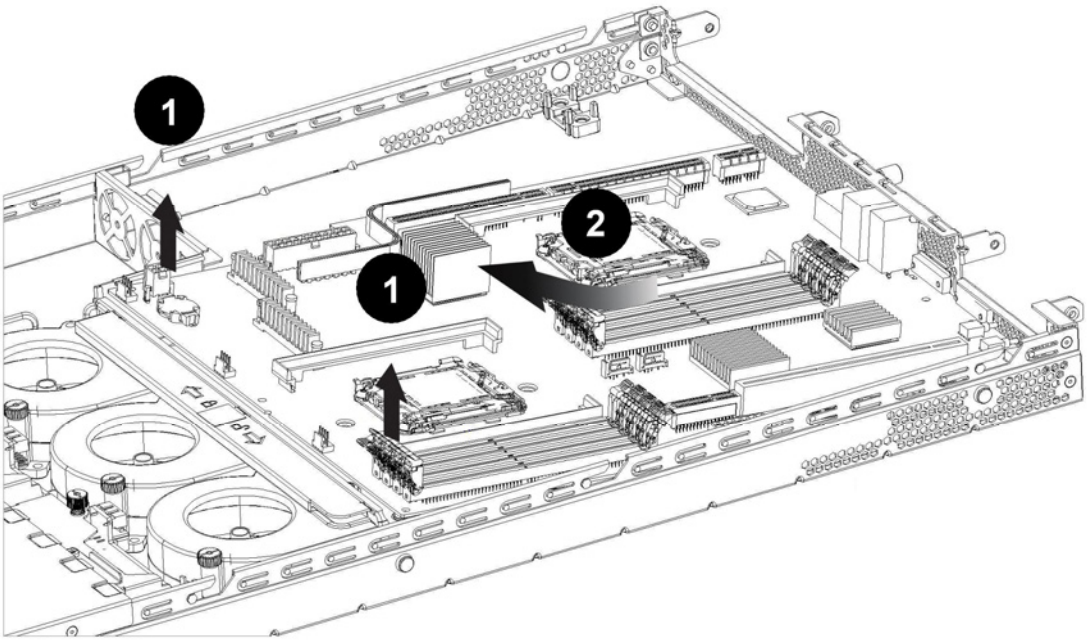

Installing a system board

This section assumes that the components or cables that would prevent a system board installation are removed or disconnected.

1. Install the system board.
    a. Lay the back end on the floor of the chassis, holding the front end up enough to clear the fan bracket.

Figure 30 Placing the system board on the floor of the chassis

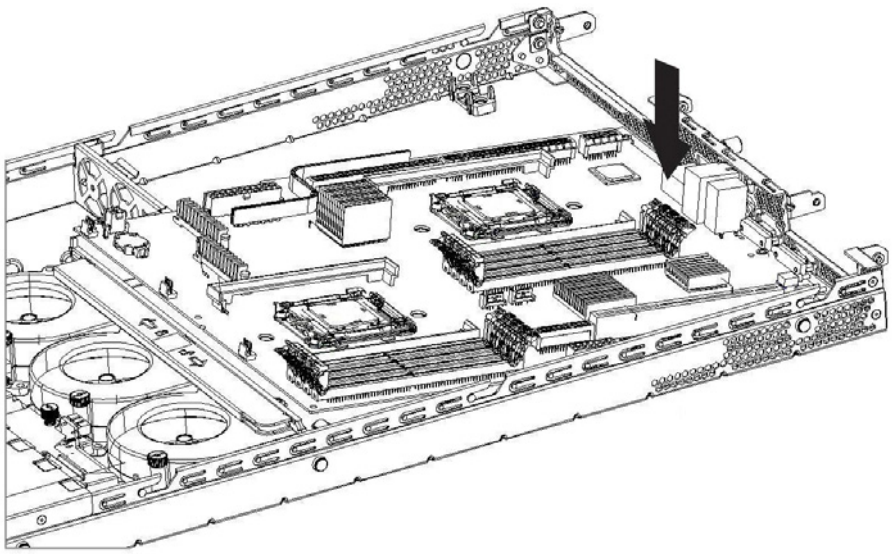

b. Slide the system board toward the back of the chassis lowering the front end as it clears the fan bracket.

Figure 31 Sliding the system board into the chassis

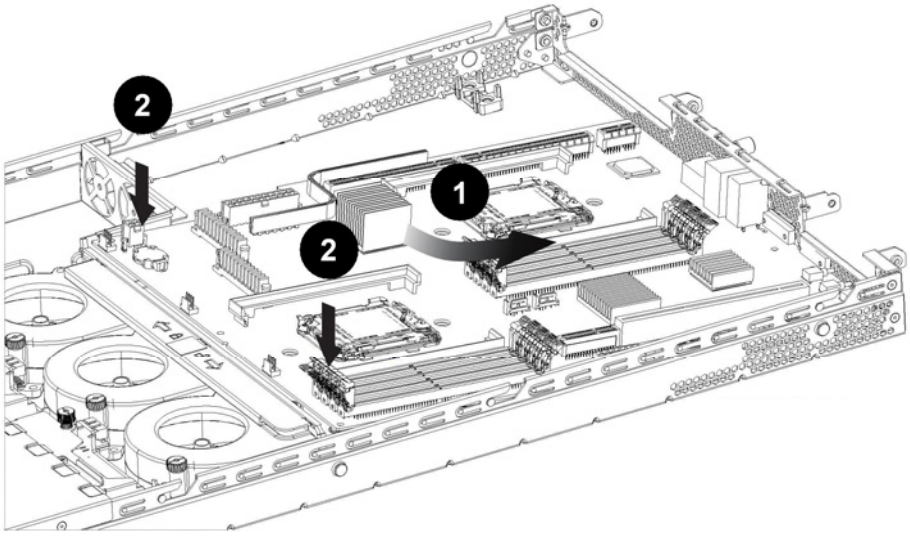

c. Position the system board so that all switches function freely and all connectors seat properly.

Figure 32 Positioning the system board connector

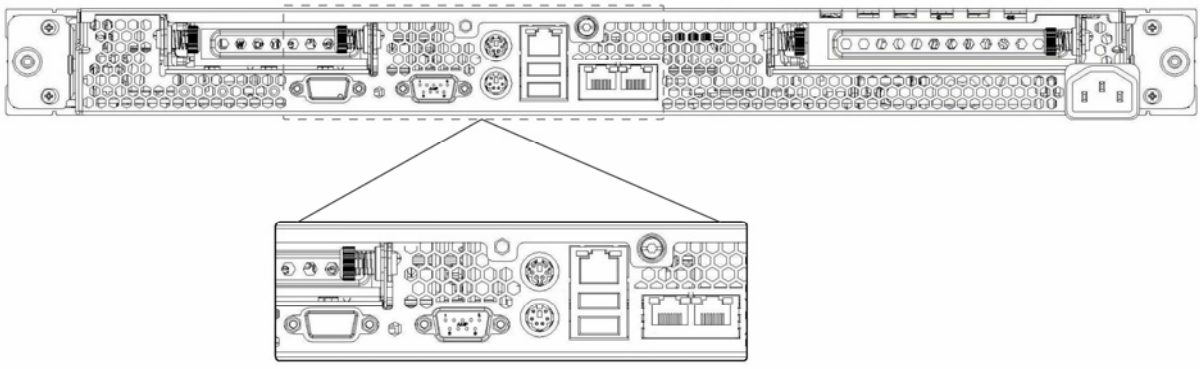

2. Install the eleven system board mounting screws.

Figure 33 Installing mounting screws on the system board

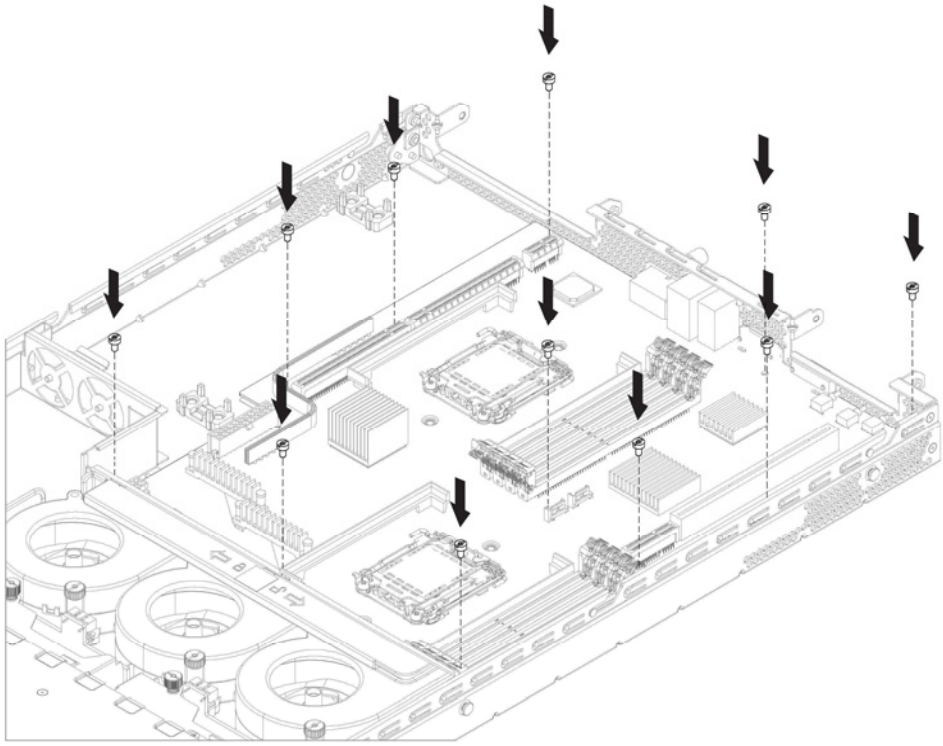

3. Follow the instructions for *Removing a processor* on page 34 and *Installing a processor* on page 35 to transfer the CPUs from the old system board to the new system board.
4. Reconnect the power supply cables, USB cable, OP panel cable, IDE cable, SATA data cables, and fan cables to the system board.
5. Install the air deflector.
    a. Place the front edge against the fan bracket.
    b. Lay the air deflector lengthwise along the section of the unit containing the power supply and full-length riser assembly.
    c. Pull both air deflector mounting tabs away from the heat sink for CPU1 and release the tabs around the heat sink guide.
    d. Reconnect the backplane power cable to the system board.
6. Follow the instructions for *Installing a memory module* on page 39 to re-install the DIMMs.
7. Follow the instructions for *Installing a riser board assembly* on page 43 to re-install the full-length riser and the low-profile riser assemblies.
8. Perform the post-installation procedures described on page 12.

System board configuration

Refer to the following sections for instructions on how to remove or replace the processors, the memory modules, the expansion boards, and the system battery.

Processor

The dual 1207-pin processor sockets on the system board support single core, 64-bit AMD Opteron processors with 1 GHz HT bus and 1 MB on-die L2 cache. Figure 34 shows the two processor sockets (U42 and U55).

Figure 34 Processor sockets

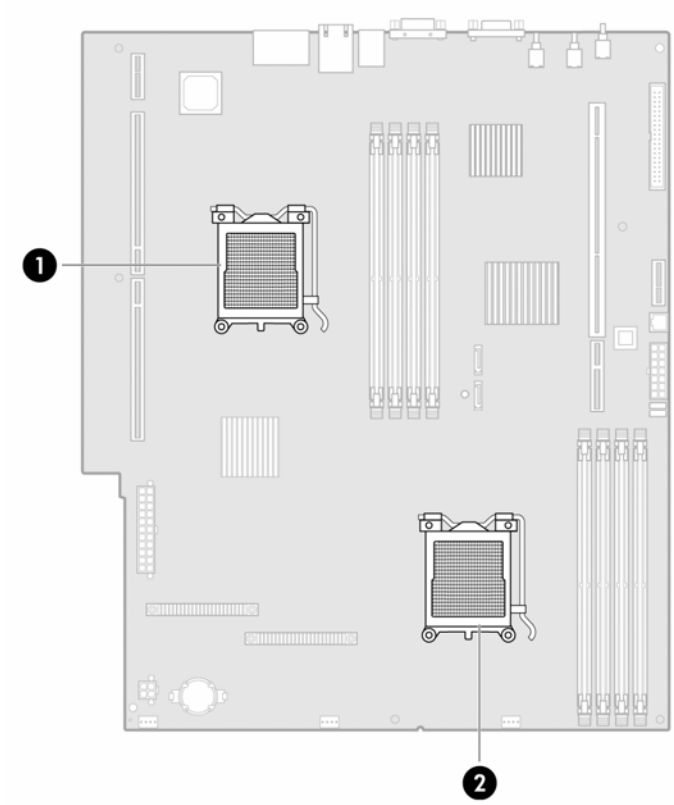

Item	Component Code	Component
1	U42	AMD Opteron 1207-pin processor 1 socket
2	U55	AMD Opteron 1207-pin processor 2 socket

Processor installation guidelines

Observe the following important guidelines before performing any of the installation steps listed in the next section:

- The processor 1 socket (U42) must always be populated. If no processor is installed in this socket, the system fails to boot, halts during POST, and does not function properly.
- Handle the processor and heat sink with care. Damage to either may affect processor performance.
- The processor socket pins are very fragile. Do not bend or damage them.
- Be sure that the server has the most recent ROM version. If the ROM is not the most recent version, failure to flash the ROM before installing a processor can cause a system failure.
- HP does not recommend using a processor in the processor 2 socket (U55) when all processor 2 socket DIMM slots (DIMM5 to DIMM8) are empty. Populate at least the DIMM7 and DIMM8 slots when you install a second processor.

CAUTION: To prevent the heat sink from tilting to one side during installation or removal procedures, HP recommends that you alternate tightening or loosening each screw a little at a time. Do not tighten or loosen one screw completely before tightening or loosening the other.

CAUTION: To help avoid damage to the processor and system board, do not install the processor without using the processor installation tool.

NOTE: The heat sink may differ slightly in appearance from the design shown in this document. This does not affect the installation or removal procedures.

Removing a processor

1. Perform the pre-installation procedures described on page 11.
2. Locate the processor you want to remove.
3. Remove the heat sink:
   a. Loosen the two spring-loaded screws a few threads, alternating back and forth between each screw, to release the heat sink from the processor base.
   b. Rotate the heat sink back and forth within the available space to break the hold of the thermal grease, then lift the heat sink away from the system board.

Figure 35 Removing a heat sink

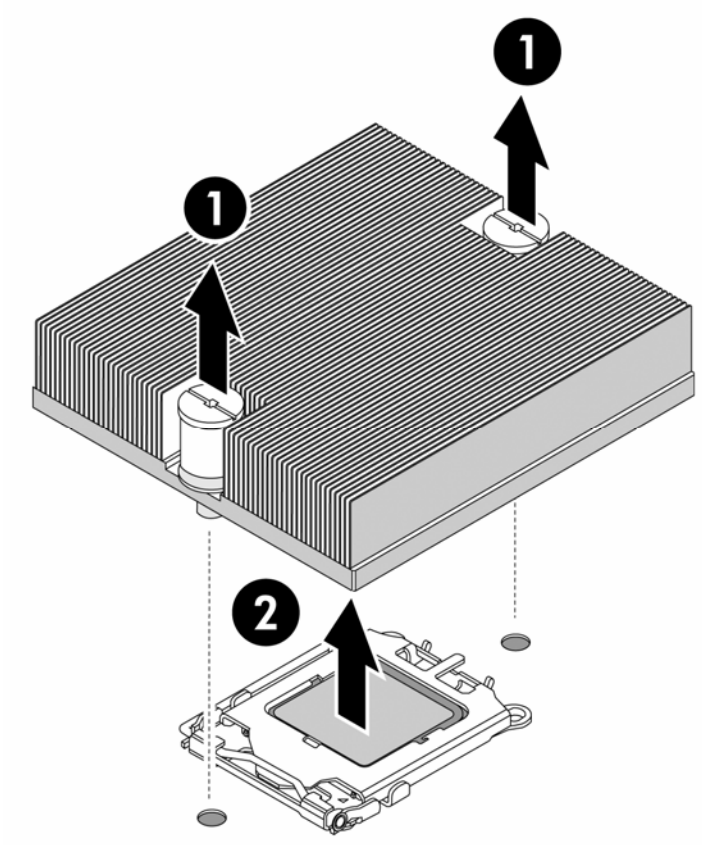

4. Remove the processor:
   a. Disengage the socket retention lever from the processor base.
   b. Lift up the socket retention bracket.
   c. Grasp the processor by the edges and lift it out of the socket.

Figure 36 Removing a processor

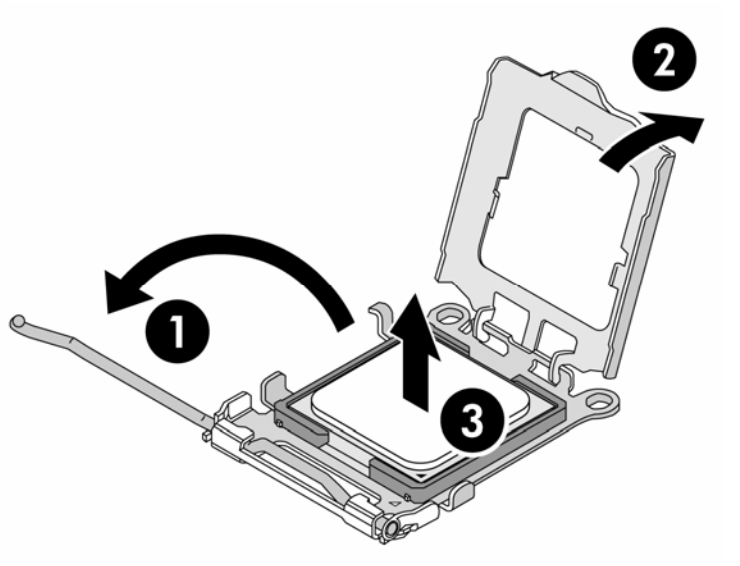

5. Place the processor on a static-dissipating work surface or inside an anti-static bag.
6. If you are replacing the processor, continue with the procedure in the "Installing a processor" section described next. Otherwise, protect the empty socket:
   a. Place the socket retention bracket over the socket.
   b. Push the socket retention lever back into place.
   c. Attach the socket cover to the socket retention bracket.
   d. Perform the post-installation procedures described on page 12.

Installing a processor

1. Perform the pre-installation procedures described on page 11.
2. Locate the processor socket on which you want to install the processor.
3. If the processor socket you want to use is not empty, perform the procedure in the "Removing a processor" section on page 34 to remove the installed processor. Then skip to step 5 in this procedure.
4. If the processor socket is empty, prepare the socket for installation:
   a. Remove the socket cover.

   NOTE: Do not discard the socket cover. If the processor is removed and not replaced with another processor in the future, the socket cover must be reinstalled to prevent damage to the socket pins.

Figure 37 Removing a socket cover

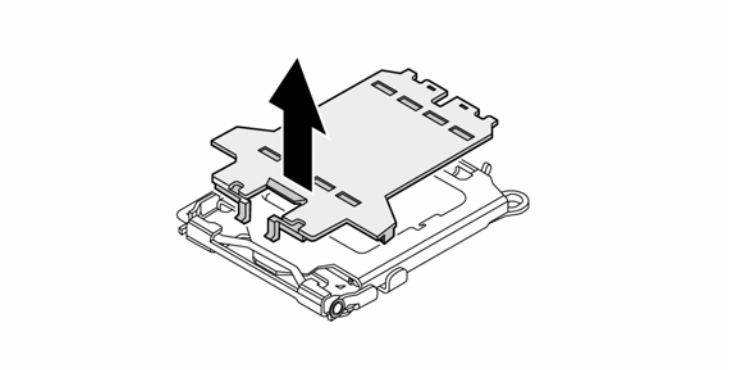

   b. Disengage the socket retention lever from the processor base.
   c. Lift up the socket retention bracket.
5. If the processor has separated from the installation tool, carefully reinsert the processor in the installation tool.

IMPORTANT: Be sure the processor remains inside the processor installation tool.

Figure 38 Inserting a processor in the processor installation tool

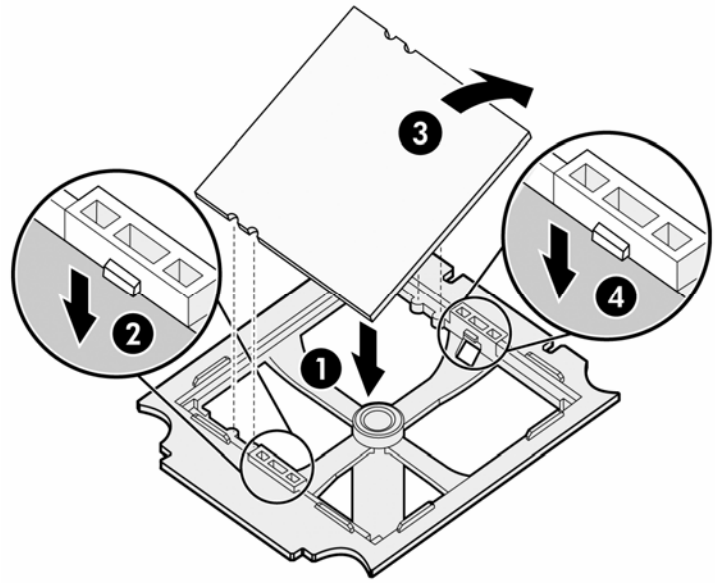

6. Use the processor installation tool to install the new processor into the socket:
   a. Align the processor installation tool with the processor socket and install the processor.

   CAUTION: Make sure that the processor is properly aligned in the socket. The corner of the processor marked with a gold triangle should align with the corner of the socket marked on the system board with a triangular symbol.

   b. Press down firmly until the installation tool clicks and separates from the processor, and then remove the installation tool.

Figure 39 Installing a processor

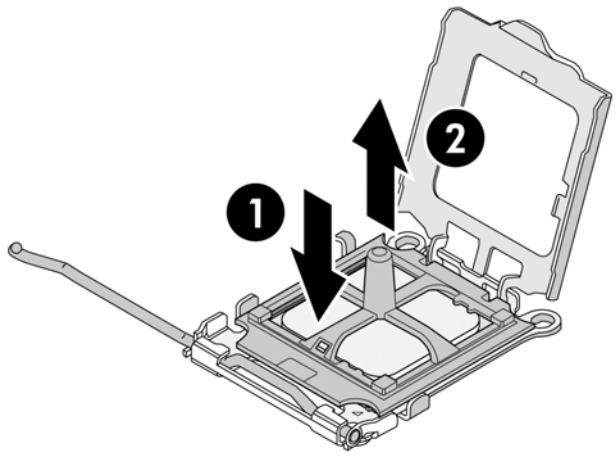

7. Secure the processor in the socket:
   a. Place the socket retention bracket over the processor.
   b. Push the socket retention lever back into place.

Figure 40 Securing a processor

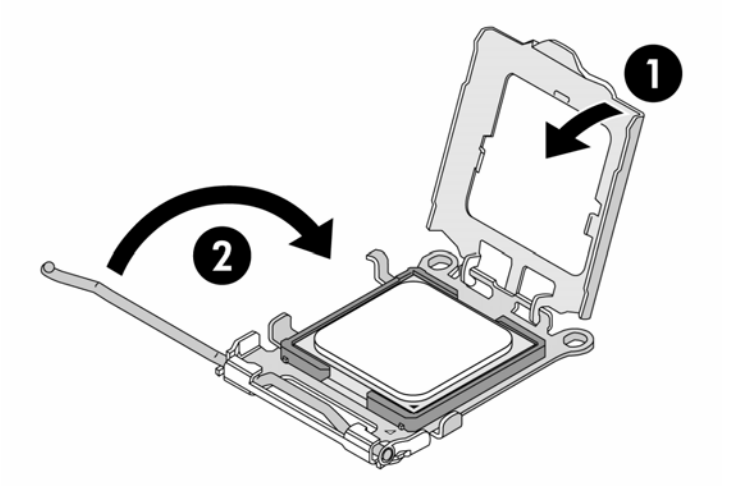

8. If the heat sink is new, remove the protective cover on the bottom of the heat sink.
9. Install the heat sink:
   a. Align the heat sink over the processor, then place the heat sink on top of the processor and the heat sink guide rails.

   CAUTION: Do not overtighten the two spring-loaded screws or they may break off. A maximum torque of 8-in-lb is set for the system.

   b. Tighten the two spring-loaded screws a few threads, alternating between each screw. Then tighten the screws completely to secure the heat sink to the processor base.

      To tighten the screws, HP recommends using the L-shaped wrench that ships with the server.

   IMPORTANT: If the heat sink is removed for any reason, it is critical that you apply more thermal interface material to the integrated heat spreader on the processor to ensure proper thermal bonding between the processor and the heat sink. Clean the contact surface of both the processor and heat sink with an alcohol pad, then re-apply an HP-approved thermal interface material before re-installing the processor. Use a pattern of five dots when applying the thermal interface material—one dot in the center, and one dot at each corner. HP recommends using Shin-Etsu X23-7783D thermal grease compound for your ProLiant server.

Figure 41 Installing a heat sink

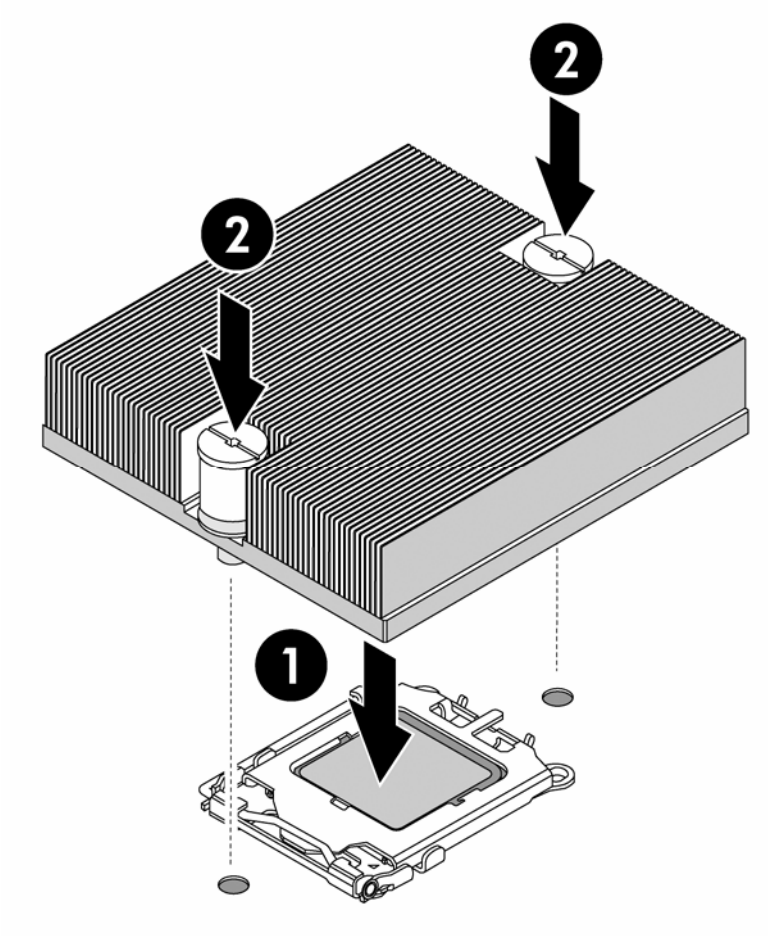

10. Perform the post-installation procedures described on page 12.

Memory

The system has eight DIMM slots that support up to 16 GB maximum system memory (2 GB in each of the eight DIMM slots).

Figure 42 DIMM slot locations

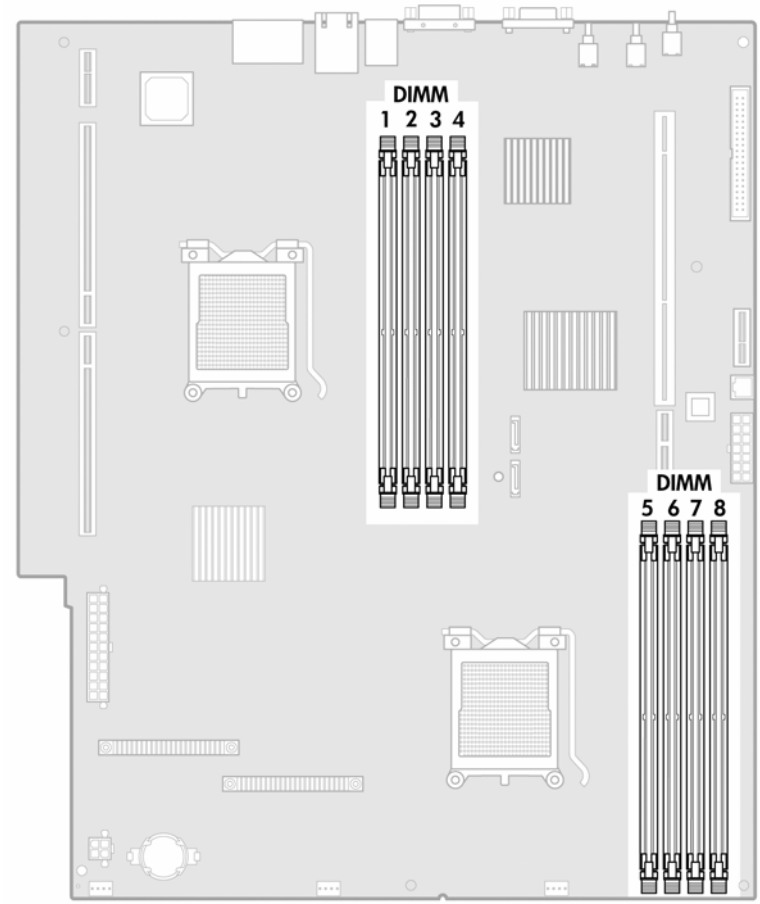

Memory installation guidelines

Observe the following important guidelines when installing memory modules:

- Use only HP-supported PC2-5300 DDR2 (667 MHz) registered ECC DIMMs in 512 MB, 1 GB, or 2 GB capacities.
- The processor 2 socket (U55) must be populated before you can install memory modules in the DIMM5 to DIMM8 slots.
- If a second processor is installed, HP does not recommend leaving all processor 2 socket DIMM slots (DIMM5 to DIMM8) empty. Populate at least the DIMM7 and DIMM8 slots when the server uses a second processor.
- Memory modules must be installed in pairs of the same size in the sequence listed below:
  - For the processor 1 socket DIMM slots: Populate DIMM3 and DIMM4 first, then DIMM1 and DIMM2.
  - For the processor 2 socket DIMM slots: Populate DIMM7 and DIMM8 first, then DIMM5 and DIMM6.
- Memory modules in DIMM1 and DIMM2 should not be larger in capacity than the modules in DIMM3 and DIMM4; similarly, the modules in DIMM5 and DIMM6 should not be larger than the modules in DIMM7 and DIMM8.

Installing a memory module

1. Perform the pre-installation procedures described on page 11.
2. If necessary, remove any accessory boards or cables that prevent access to the DIMM slots.
3. Locate an empty DIMM slot on the system board.
4. If necessary, open the holding clips of the selected DIMM slot.
5. Remove the memory module from its protective packaging, handling it by the edges. Do not touch any components on the module or the gold connectors on the bottom edge.
6. Install the memory module:
   a. Align the notch on the bottom edge of the module with the keyed surface of the DIMM slot, and then press the module fully into the slot.

The DIMM slots are designed to ensure proper installation. If you insert a memory module but it does not fit easily into the slot, you may have inserted it incorrectly. Reverse the orientation of the module and insert it again.

b. Firmly press the holding clips inward to secure the memory module in place.

If the holding clips do not close, the module is not inserted correctly.

Figure 43 Installing a memory module

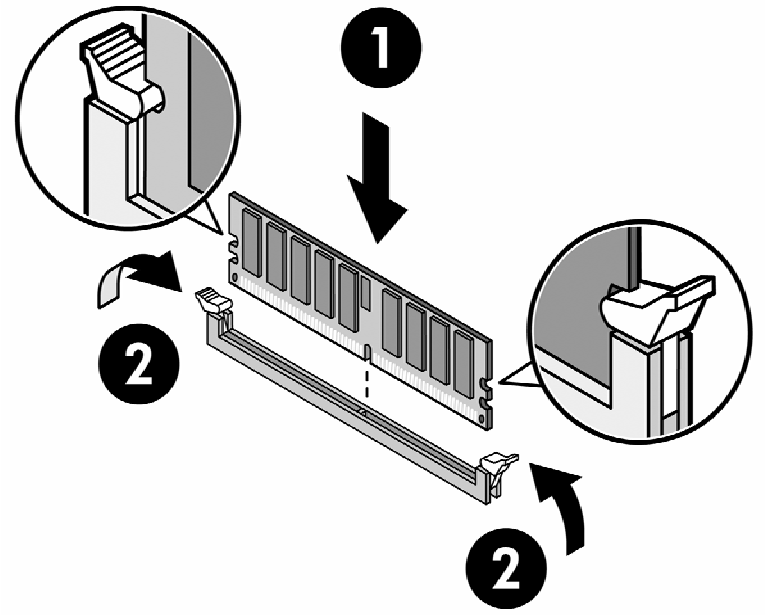

7. Perform the post-installation procedures described on page 12.

Removing a memory module

1. Perform the pre-installation procedures described on page 11.

2. If necessary, remove any accessory boards or cables that prevent access to the DIMM slots.

3. Locate the memory module you want to remove.

4. Remove the selected memory module:

a. Completely open the holding clips securing the module.

This forces the module up in the slot and makes it easier to remove.

b. Gently pull the memory module upward to remove it from its slot.

Figure 44 Removing a memory module

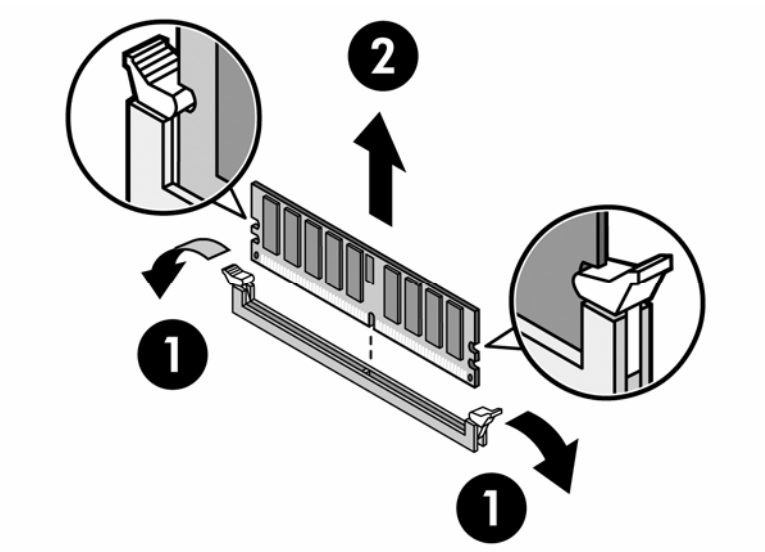

5. Place the memory module on a static-dissipating work surface or inside an anti-static bag.

6. Perform the post-installation procedures described on page 12.

Expansion boards

System board expansion slots

There are four expansion slots on the system board that support four different PCI riser boards.

Figure 45 Expansion slots

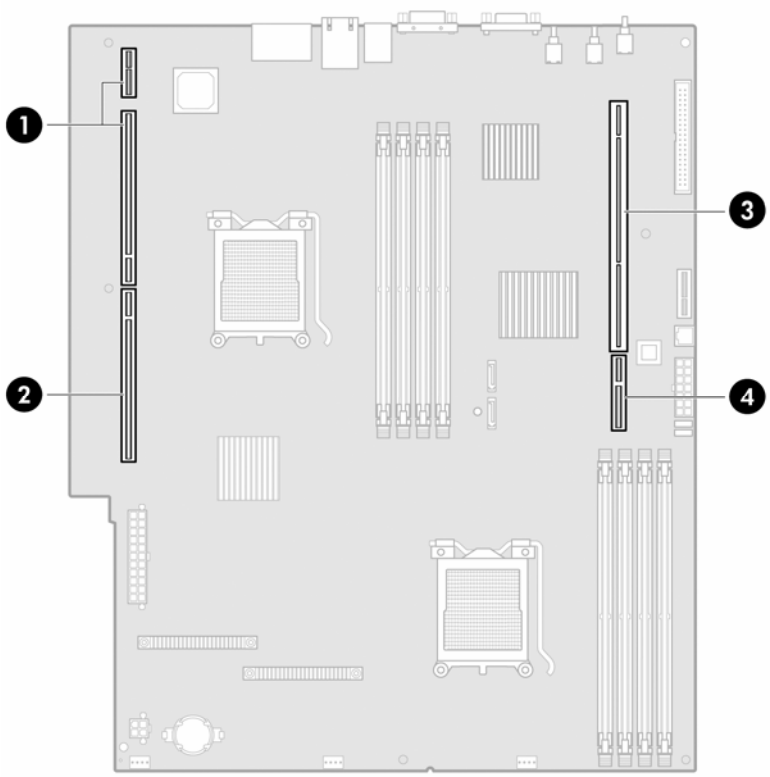

Item	Component	Function
1	HTX slot	Supports a full-sized 1 GHz, 16x16 HTX expansion board installed on an HTX riser board
2	PCI Express x16 slot	Supports a full-sized PCI Express x16 expansion board installed on a PCI Express x16 riser board
3	PCI-X slot	Supports a low-profile 64-bit, 133 MHz PCI-X expansion board installed on a PCI X riser board
4	PCI Express x4 slot	Supports a low-profile PCI Express x4 expansion board installed on a PCI Express x4 riser board

Riser board assemblies

The server supports up to two expansion boards installed on riser boards. With the appropriate riser boards, the two riser board assemblies that come with the server convert the expansion slots on the system board to slots that are positioned at a 90° angle from the system board. You can then install expansion boards in a position parallel to the system board.

The system comes with one full-sized assembly and one low-profile assembly. The full-sized assembly supports either an HTX riser board or a PCI Express x16 riser board. The low-profile assembly supports either a PCI Express x4 riser board or a PCI-X riser board.

NOTE: Some full-size expansion boards may not be supported due to a small blockage caused by the molded connector on the end of the AC power cable. The connector molding reduces the overall component space near the end of full-size expansion boards.

NOTE: You cannot install the PCI Express x4 and PCI-X riser boards at the same time. You also cannot install the HTX and PCI Express x16 riser boards at the same time.

Expansion board installation guidelines

Use only HP-supported expansion boards that meet the following specifications:

- HTX: Full-sized, 1 GHz, 16x16
- PCI Express x4: Low-profile
- PCI Express x16: Full-sized
- PCI-X: Low-profile, 64-bit, 3.3 V, 133 MHz

For ease of reading, the riser board assembly will be referred to as the "assembly" in the following sections. Also, in some figures, the plane section of the assembly is dimmed out for clarity.

Removing a riser board assembly

1. Perform the pre-installation procedures described on page 11.
2. Locate the assembly you want to remove:
   - To install, remove, or replace an HTX or PCI Express x16 expansion board or riser board, remove the full-sized assembly.
   - To install, remove, or replace a PCI-X or PCI Express x4 expansion board or riser board, remove the low-profile assembly.
3. If an expansion board is installed in the assembly, disconnect any cables that connect the expansion board to the system board.
4. Remove the appropriate assembly:
   a. Loosen the two captive thumbscrews that secure the assembly to the chassis.
   b. Lift the assembly away from the chassis.

      If you are removing the full-sized assembly, first lift the assembly from the end with the captive thumbscrews to disconnect the riser board from the expansion slot on the system board. Slide the assembly approximately 1.25 cm (0.5 in) toward the rear of the chassis, then lift the assembly away from the chassis.

Figure 46 Removing the full-sized assembly

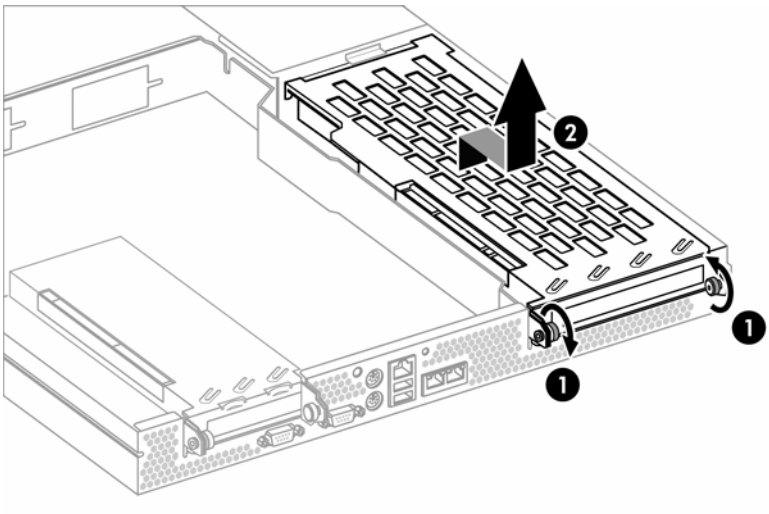

Figure 47 Removing the low-profile assembly

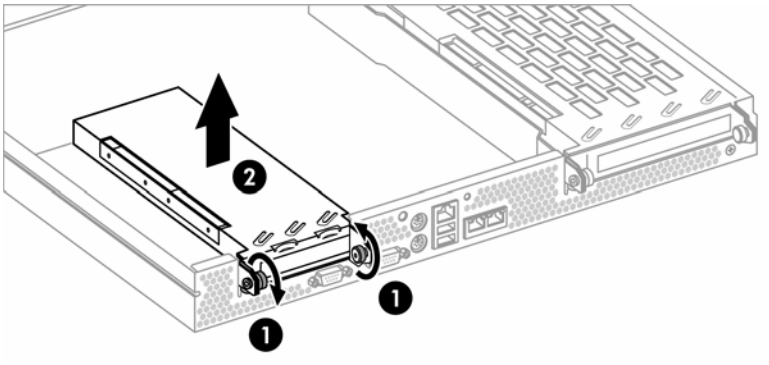

Installing a riser board assembly

1. Install the assembly in server:
   a. Align the assembly with the correct slot on the system board and firmly press the assembly into the slot.

      If you are reinstalling the full-sized assembly, slide the front of the assembly into place with the three retaining tabs on the chassis. The front edge of the assembly should slide underneath the middle retaining tab. The corners of the assembly should rest on top of the left and right retaining tabs. Then, align the riser board connector with the expansion slot on the system board and firmly press the assembly into the slot.

   b. Tighten the two captive thumbscrews that secure the assembly to the chassis.

Figure 48 Installing the full-sized assembly

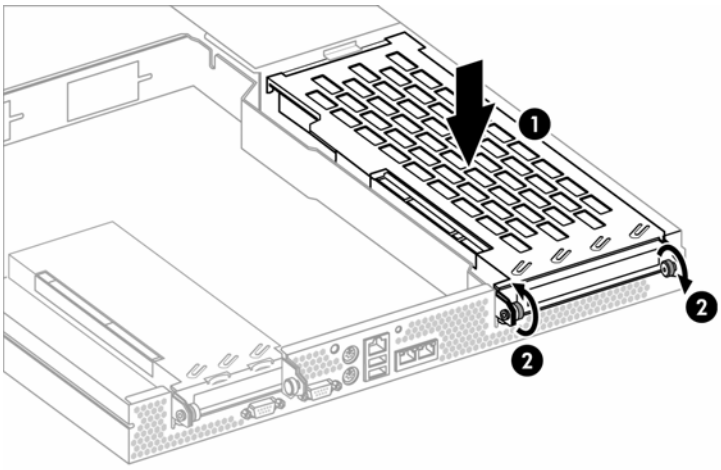

Figure 49 Installing the low-profile assembly

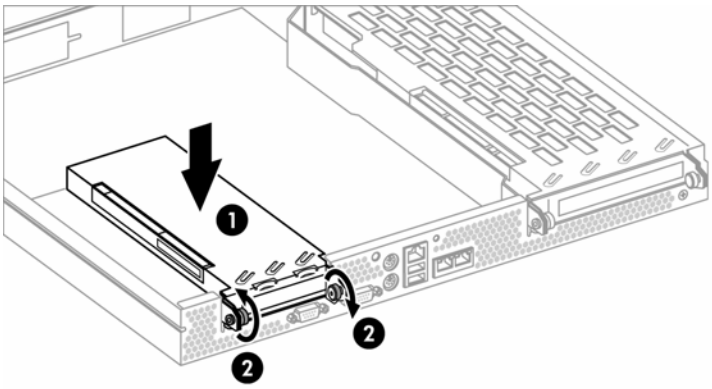

2. Perform the post-installation procedures described on page 12.

Removing a riser board

1. Perform the procedure described in the "Removing a riser board assembly" section on page 42 to remove the appropriate assembly.
2. If an expansion board is installed in the assembly, perform the procedure in the "Removing an expansion board" section on page 46.
3. Remove the installed riser board from the assembly:

NOTE: Keep the two screws you remove in this step for installing the new riser board later.

   a. Remove the two screws securing the riser board to the assembly.
   b. Remove the riser board from the assembly.

Figure 50 Removing a full-sized riser board

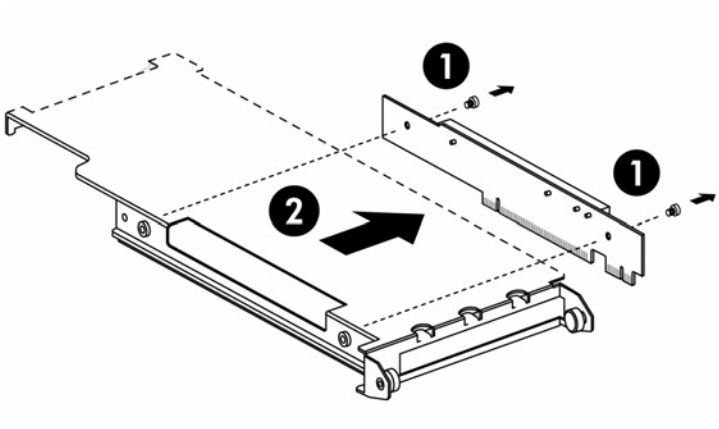

Figure 51 Removing a low-profile riser board

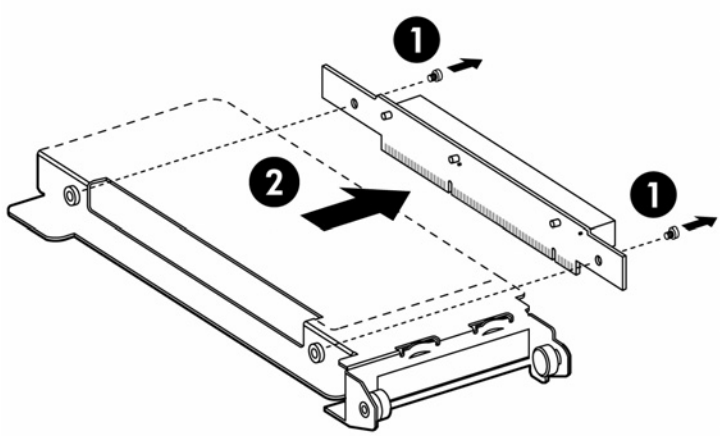

Installing a riser board

1. Perform the procedure described in the "Removing a riser board assembly" section on page 42 to remove the appropriate assembly.
2. Prepare the assembly for the new riser board:
   - If no riser board is installed on the assembly, remove the two screws installed on the inside of the vertical side of the assembly.
   - If a riser board is already installed on the assembly, perform the procedure in the "Removing a riser board" section on page 44 to remove the riser board and expansion board, if any.

NOTE: Keep the two screws you remove in this step for installing the new riser board later.

3. Install the new riser board on the assembly:
   a. Align the back of the riser board with the mounting posts and screw holes on the inside of the assembly.

   The slot on the riser board should face the inside of the assembly.

   b. Secure the riser board to the assembly using the two screws you removed in step 2.

Figure 52 Installing a full-sized riser board

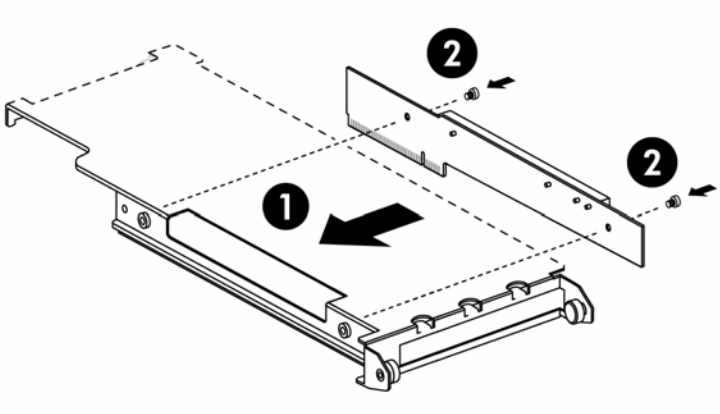

Figure 53 Installing a low-profile riser board

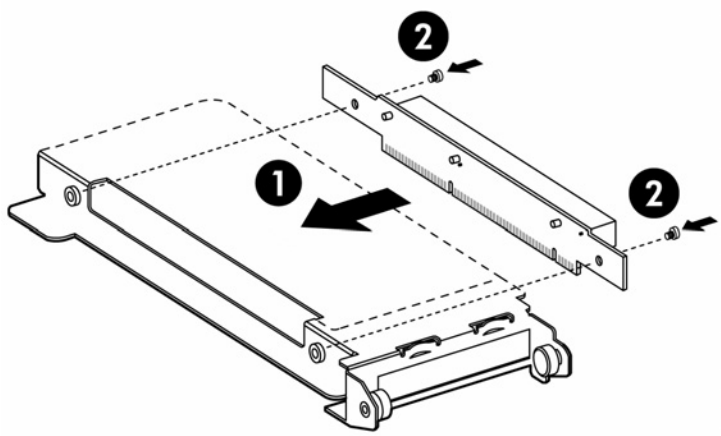

4. Continue with the procedure in the "Installing an expansion board" section on page 46 or the "Installing a riser board assembly" section on page 43 as appropriate.

Removing an expansion board

1. Perform the procedure in the "Removing a riser board assembly" section on page 42 to remove the appropriate assembly.
2. Hold the expansion board by the edges and pull it out of the riser board slot.
3. Place the expansion board on a static-dissipating work surface or inside an anti-static bag.
4. If you are not installing another expansion board, reinstall the slot cover on the assembly.
5. Continue with the procedure in the "Installing an expansion board" section on page 46, the "Removing a riser board" section on page 44, or the "Installing a riser board assembly" section on page 43 as appropriate.

Installing an expansion board

1. Perform the procedure in the "Removing a riser board assembly" section on page 42 to remove the appropriate assembly.
2. Remove the slot cover on the assembly if it is installed.

   Store it for reassembly later.

△ **CAUTION:** Do not discard the slot cover. If the expansion board is removed in the future, the slot cover must be reinstalled to maintain proper cooling.

Figure 54 Removing the full-sized riser board assembly slot cover

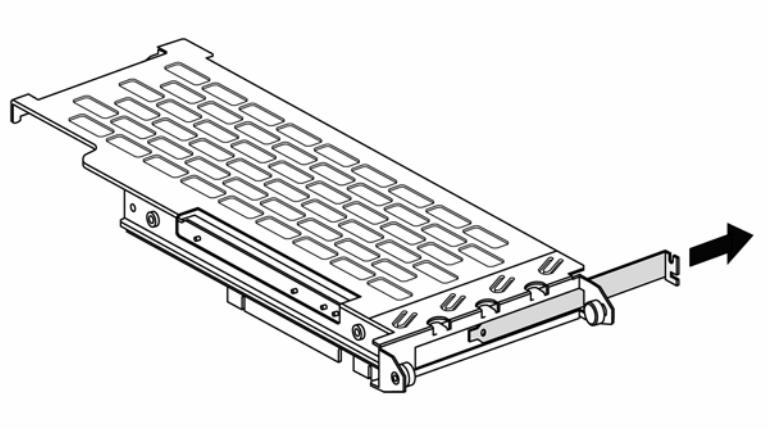

Figure 55 Removing the low-profile riser board assembly slot cover

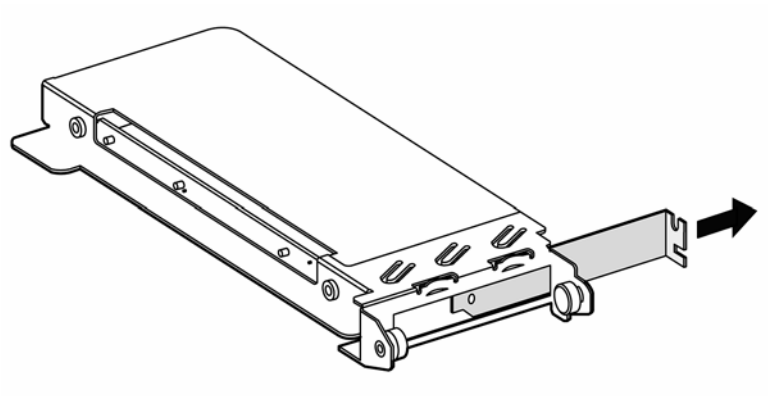

3. If an expansion board is installed in the assembly, perform the procedure in the "Removing an expansion board" section on page 46.
4. Remove the expansion board from its protective packaging, handling it by the edges.
5. Verify that the size of the expansion board and its connector are compatible with the assembly.

   If necessary, perform the procedures in the "Removing a riser board" section on page 44 and the "Installing a riser board" section on page 45 to install the correct riser board.
6. Slide the expansion board into the riser board slot.

   Press the board firmly to seat it properly in the slot.

Figure 56 Installing a full-sized HTX or PCI Express x16 expansion board

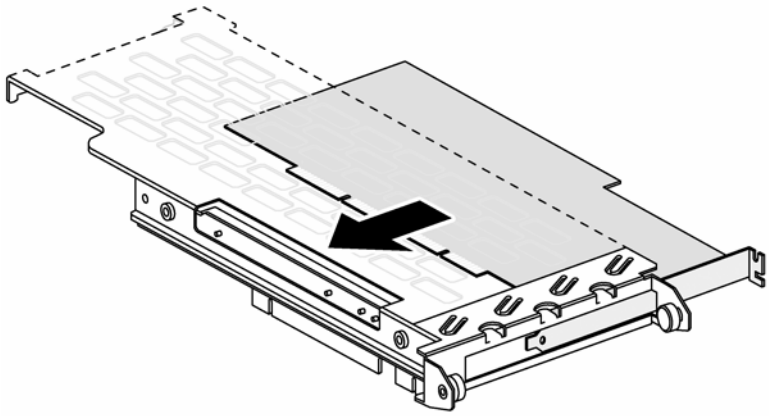

Figure 57 Installing a low-profile PCI-X or PCI Express x4 expansion board

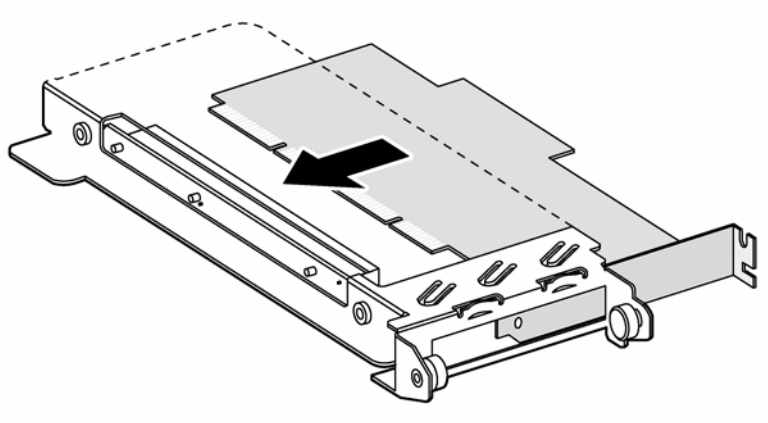

7. Connect any necessary cables to the expansion board.
   Refer to the documentation that came with the board.
8. Continue with the procedure in the "Installing a riser board assembly" section on page 43.

System battery

The HP ProLiant server uses nonvolatile memory that requires a battery to retain system information when power is removed. The battery, a 3 V 200-mAh internal lithium battery, is located on the system board (XBAT1).

Figure 58 System battery location

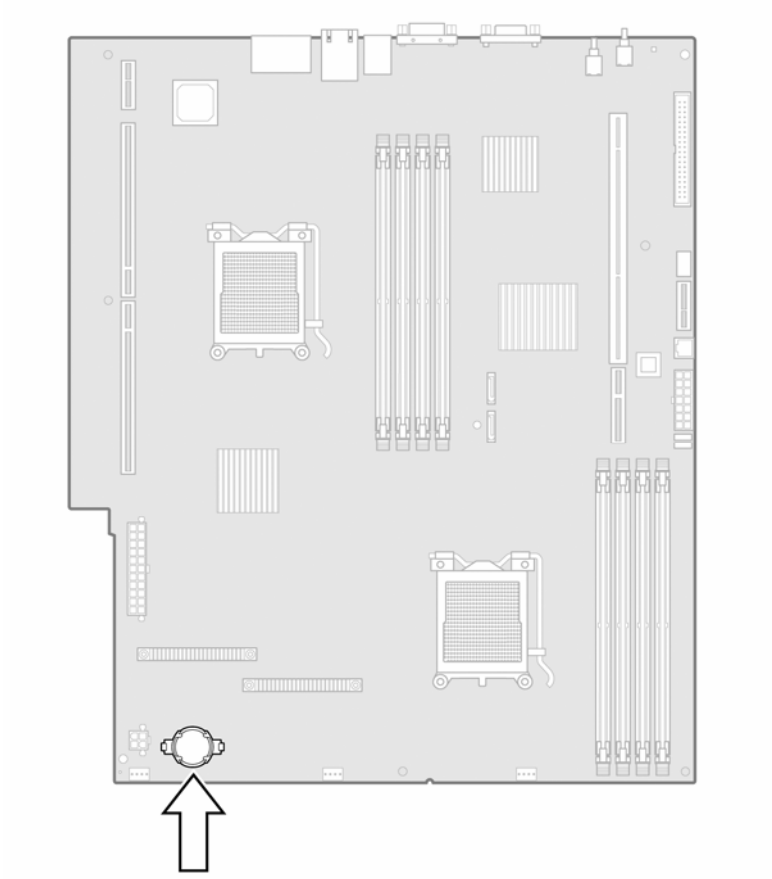

If the server no longer automatically displays the correct date and time, the system battery that provides power to the real-time clock may need to be replaced. Under normal use, the battery life is 5 to 10 years.

WARNING! Note the following warnings when replacing the system battery.

- Replace the battery with the same type as the battery recommended by HP. Use of another battery may present a risk of fire or explosion.
- A risk of fire and chemical burn exists if the battery is not handled properly. Do not disassemble, crush, puncture, or short external contacts, or expose the battery to temperatures higher than 60° C (140° F).
- Do not dispose of the used battery in water or fire. Dispose of used batteries according to manufacturer's instructions.

CAUTION: Loss of BIOS settings occurs when the battery is removed. BIOS settings must be reconfigured whenever the battery is replaced.

Replacing the system battery

1. If necessary, remove any accessory boards or cables that prevent access to the battery socket.
2. Remove the installed battery:

   IMPORTANT: Do not bend the spring latch during battery replacement. For proper operation, the latch must maintain a position of contact with the battery.

   a. Insert a small flat-blade screwdriver or a similar tool between the battery and spring latch to dislodge the battery from its socket.
   b. Lift up the old battery to remove it.

Figure 59 Removing the system battery

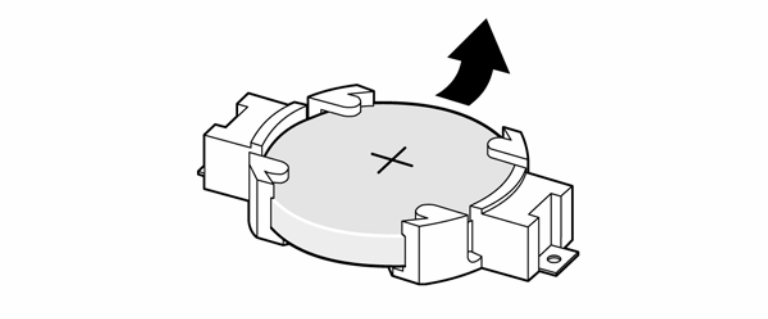

3. Insert a new battery with the positive polarity (+ side) facing up, and ensure that it is seated completely. Ensure the spring latch is in place, and that it holds the battery firmly.

Figure 60 Installing the system battery

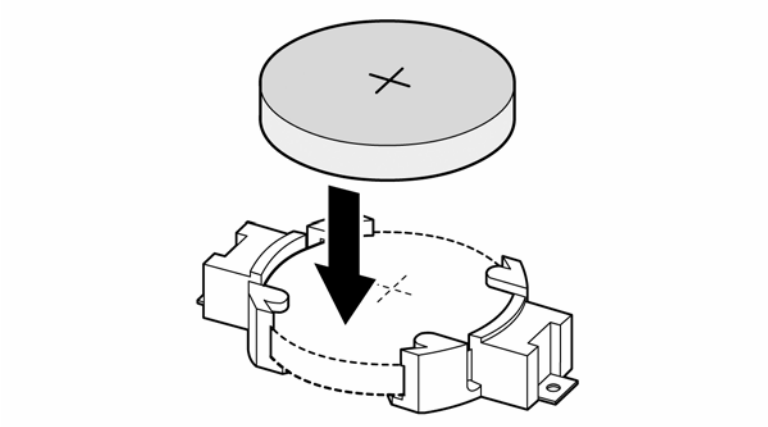

4. Perform the post-installation procedures described on page 12.

System fans

The server has three system fans located behind the drive bays. Figure 61 shows the locations of these system fans and the connections to the system board.

Figure 61 System fans

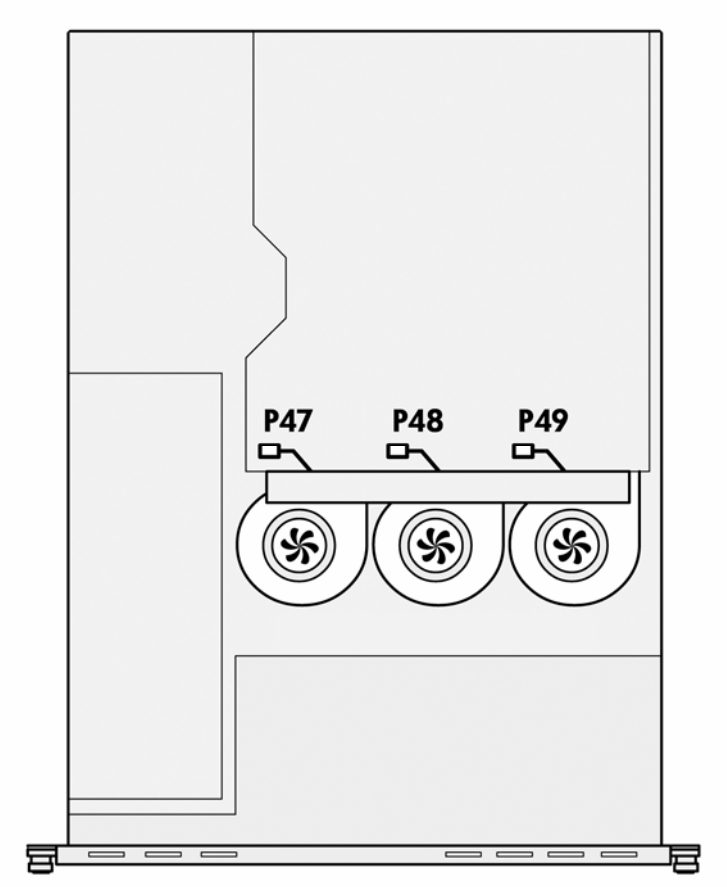

If a system fan becomes defective, you must replace the fan to allow the server to operate properly.

Removing a system fan

1. Perform the pre-installation procedures described on page 11.
2. Disconnect the 14-pin power cable from the connector on the system board (P22).
3. Remove the power cable guide above the system fans:
   a. Slide the power cable guide away from the power supply.
   b. Pull the power cable guide toward the front of the server and place it out of the way.

Figure 62 Removing the power cable guide

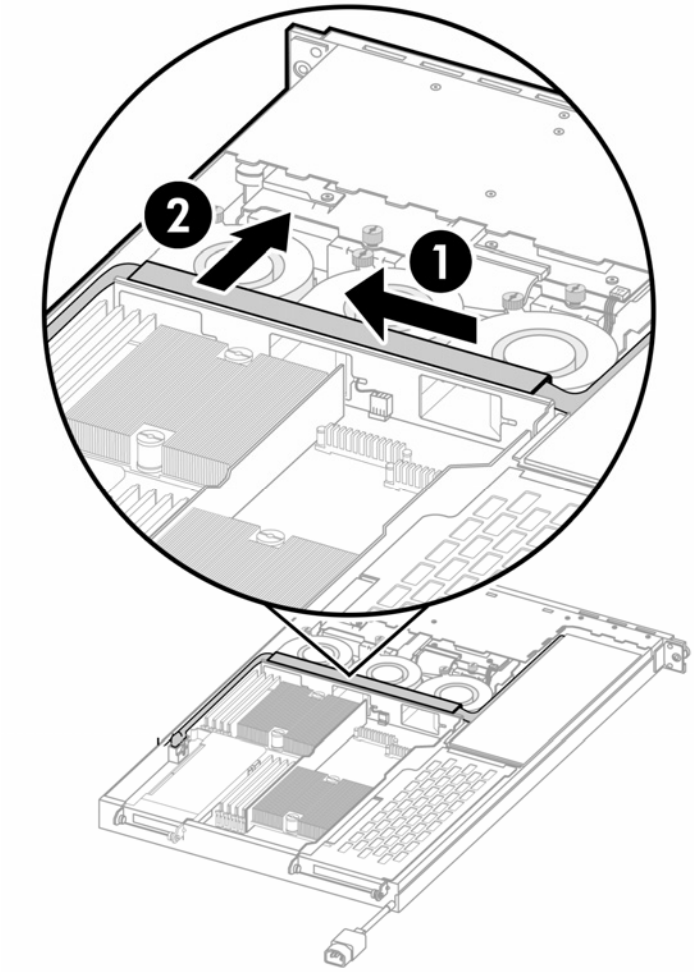

4. Remove the system fan you want to replace:
   a. Disconnect the power cable of the fan from the system board and slide the cable out of the notch in the chassis partition wall.

      The fan closest to the power supply connects to P47. The middle fan connects to P48. The fan farthest from the power supply connects to P49.
   b. Loosen the screw holding the fan to the chassis.
   c. Lift the fan away from the chassis.

Figure 63 Removing a system fan from the chassis

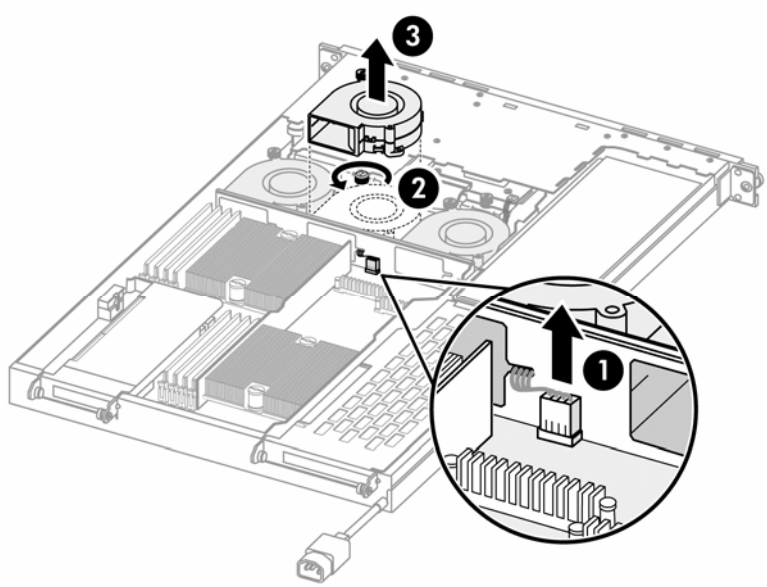

Installing a system fan

1. Install the new system fan:
   a. Place the fan in an open fan location in the chassis.
   b. Connect the fan power cable to the connector on the system board, and slide the power cable into the notch in the chassis partition wall.

      The fan closest to the power supply connects to P47. The middle fan connects to P48. The fan farthest from the power supply connects to P49.
   c. Tighten the screw holding the fan to the chassis.

Figure 64 Installing a system fan

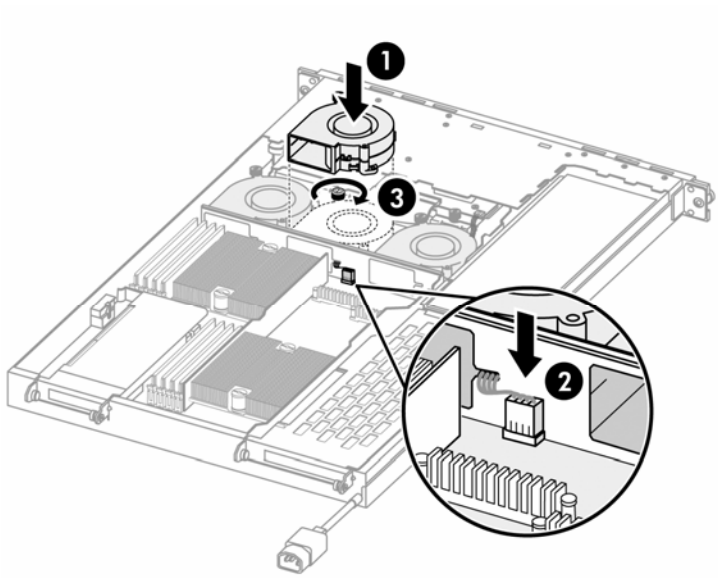

2. Reinstall the power cable guide above the system fans:
   a. Insert the power cable guide into the slots in the rail above the system fans.
   b. Slide the power cable guide toward the power supply.

Figure 65 Installing the power cable guide

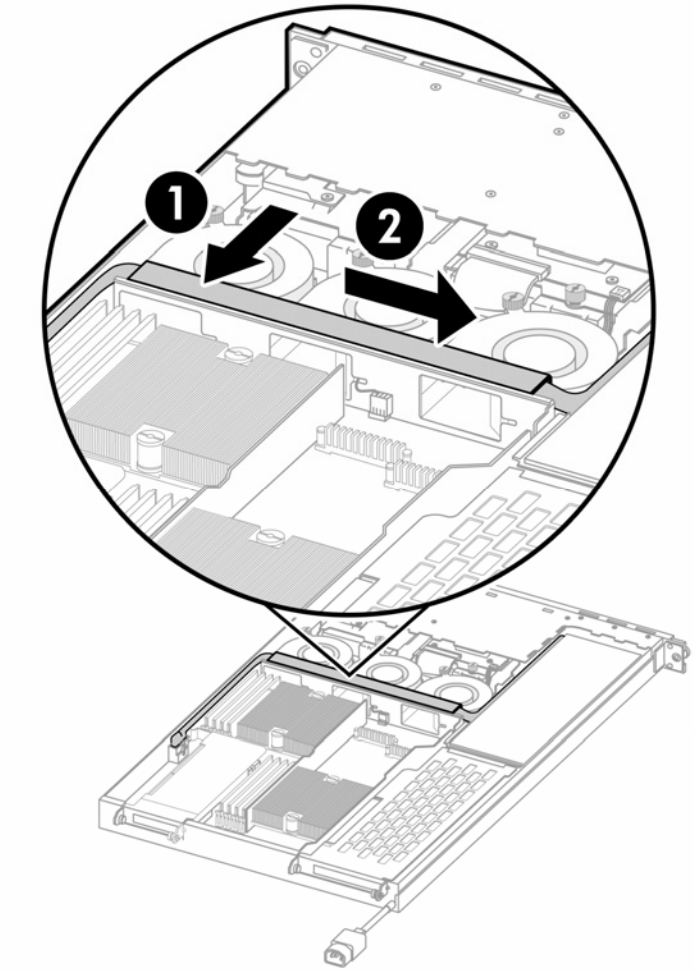

3. Connect the 14-pin power cable to the connector on the system board (P22).
4. Perform the post-installation procedures described on page 12.

Power supply unit (PSU)

Located on the rear panel of the server is a single standard autoranging 650-watt PSU. Figure 66 shows the location of the PSU.

Figure 66 Power supply unit

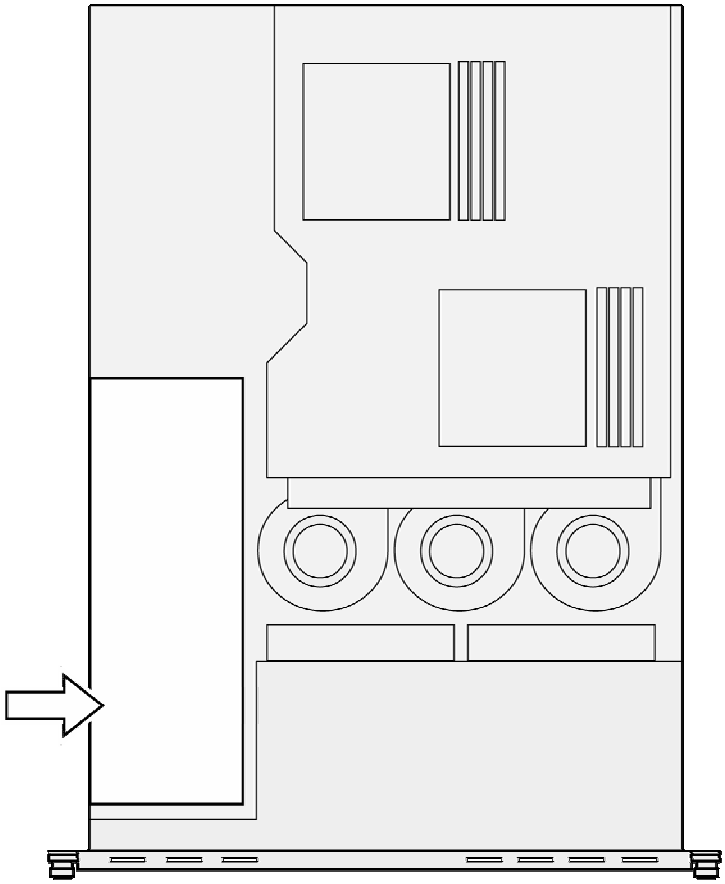

The PSU power cables connect to the P34 and P22 connectors on the system board. Figure 67 shows the PSU power cable routing.

Figure 67 Power supply cable routing

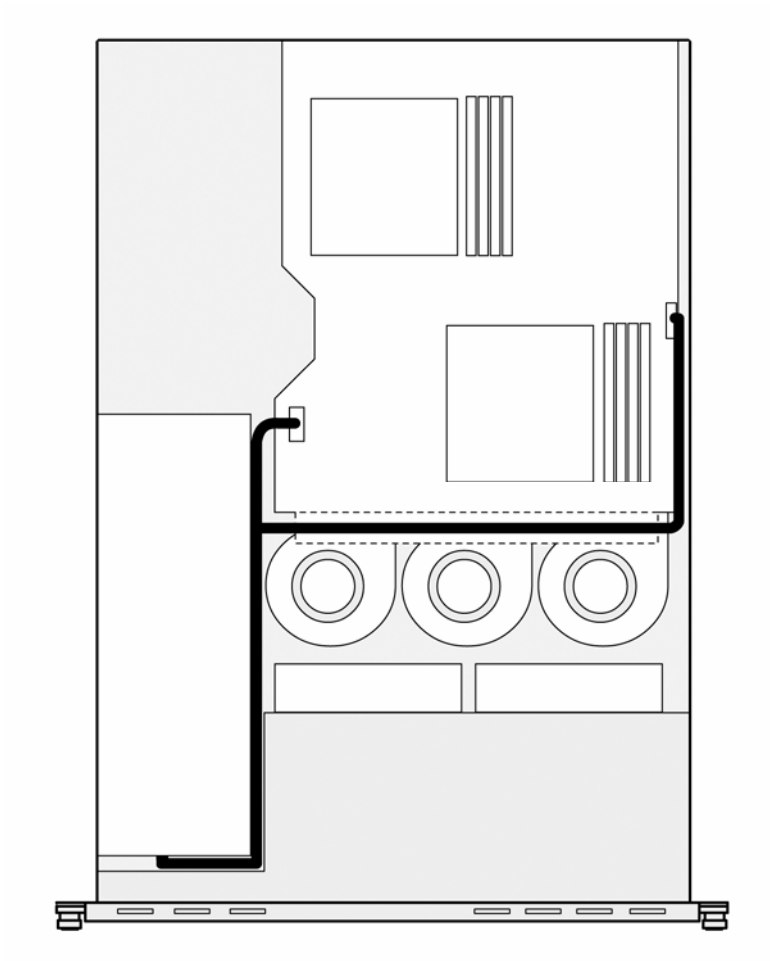

WARNING! Take note of the following reminders to reduce the risk of personal injury from electric shock hazards and/or damage to the equipment.

- Installation of power supply units should be referred to individuals who are qualified to service server systems and are trained to deal with equipment capable of generating hazardous energy levels.
- DO NOT open the power supply unit. There are no serviceable parts inside.

Replacing the power supply unit

1. Perform the pre-installation procedures described on page 11.
2. Perform the procedure in the "Removing a riser board assembly" section on page 42 to remove the full-sized riser board assembly.
3. Remove the power cable guide above the system fans:
   a. Slide the power cable guide away from the power supply.
   b. Pull the power cable guide toward the front of the server and place it out of the way.

Figure 68 Removing the power cable guide

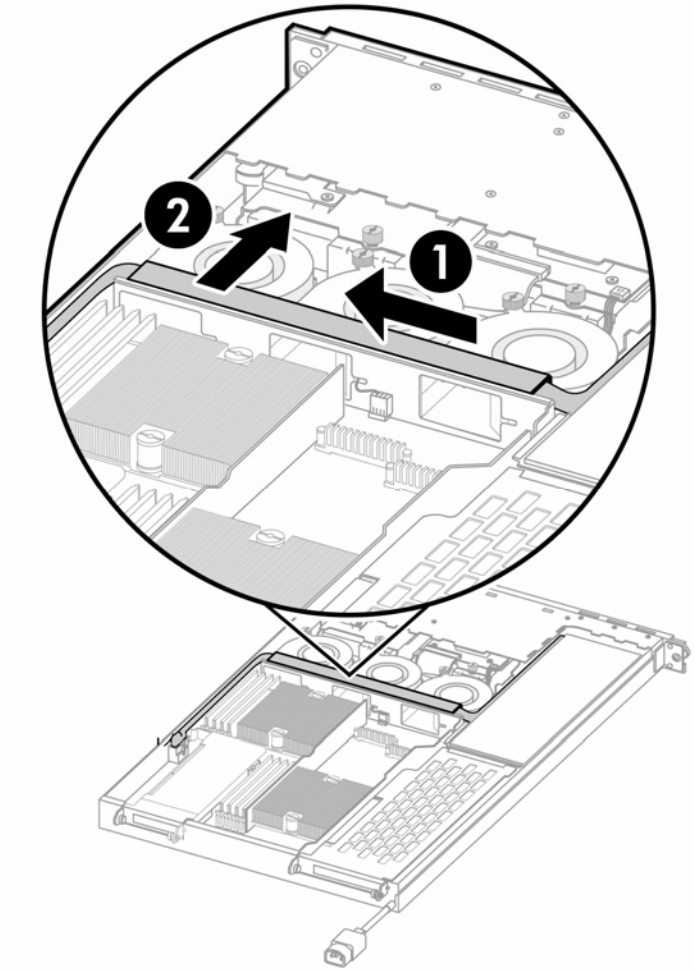

4. Disconnect both power supply cables from the system board (P22 and P34).
5. Remove the PSU:

NOTE: Keep the two screws you remove in this step for installing the new PSU later.

   a. Disconnect the AC power cable from the rear of the PSU.
   b. Remove the two mounting screws on the rear of the PSU.
   c. Slide the PSU toward the front of the server.
   d. Lift the rear of the PSU away from the mounting pins in the chassis, and then remove the PSU, power cables, and power cable guide from the server.

Figure 69 Removing the PSU

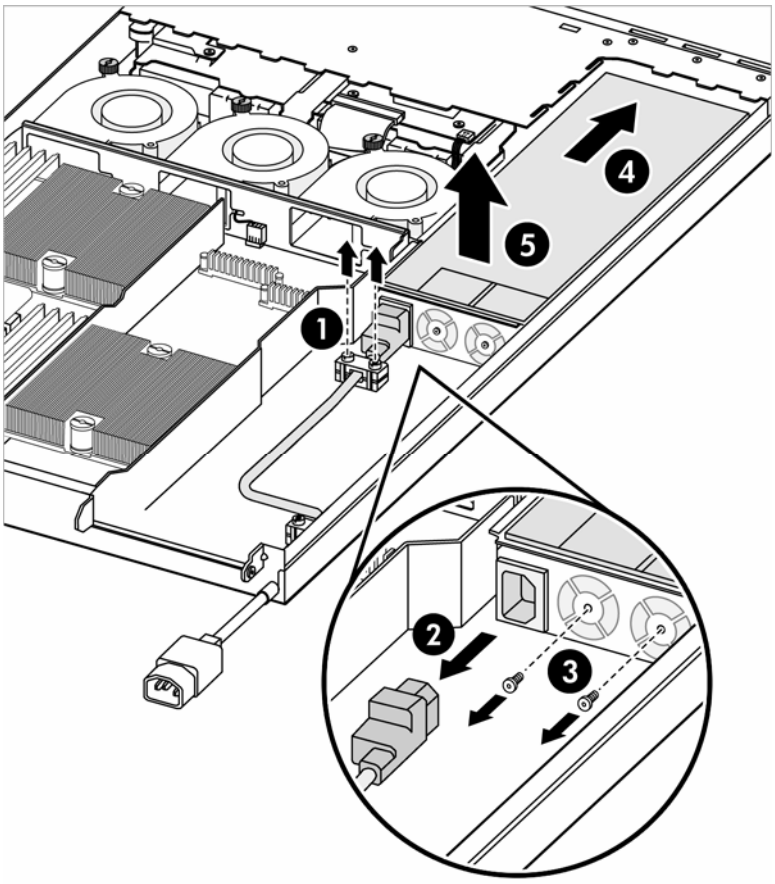

6. Install the new PSU:

CAUTION: Do not overtighten the screws or they may break. A maximum torque of 7 ± 1 is set for the system.

- **a.** Place the front of the new PSU in the PSU section of the chassis while raising the rear of the PSU above the power supply mounting pins, then slide the PSU toward the front of the server and over the power supply mounting pins.
- **b.** Lower the rear of the PSU into the chassis, then slide the PSU toward the rear of the server until it touches the mounting bracket.
- **c.** Secure the PSU to the mounting bracket with the two screws you removed in step 5.
- **d.** Connect the AC power cable to the rear of the PSU.

Figure 70 Installing a PSU

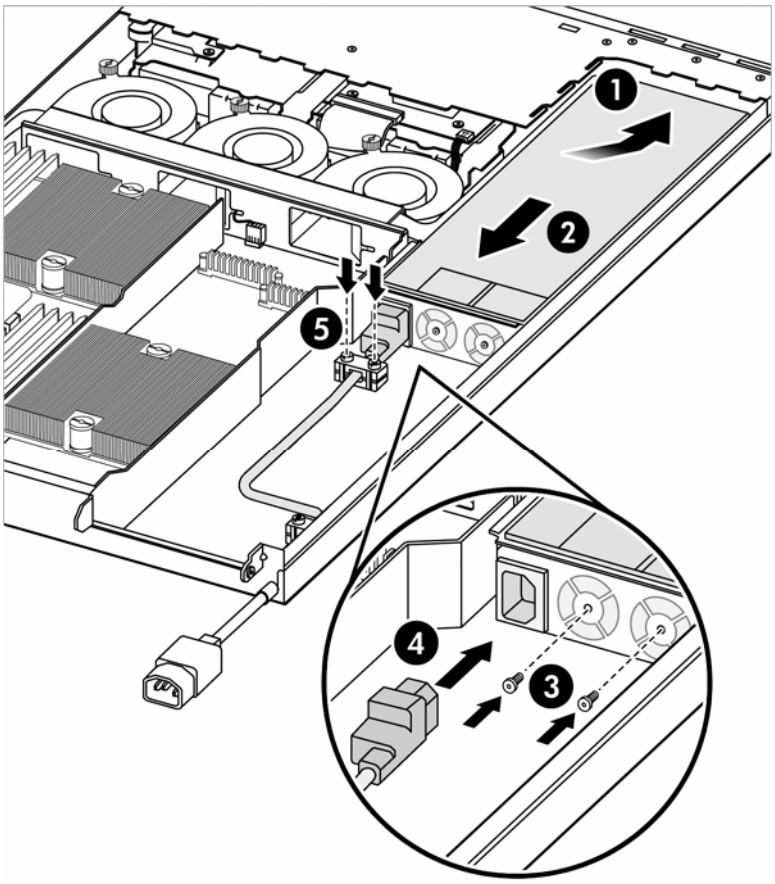

7. Connect the new power supply cables to the system board (P22 and P34).
8. Install the new power cable guide above the system fans:
   a. Insert the power cable guide into the slots in the rail above the system fans.
   b. Slide the power cable guide toward the power supply.

Figure 71 Installing the power cable guide

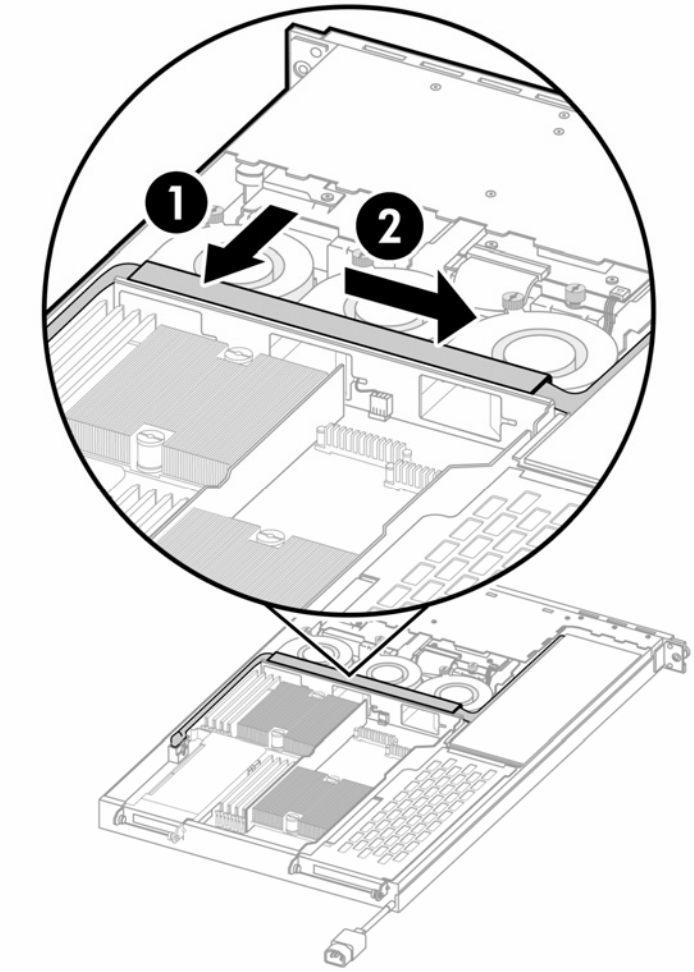

9. Perform the procedure in the "Installing a riser board assembly" section on page 43 to reinstall the full-sized riser board assembly.
10. Perform the post-installation procedures described on page 12.

Diagnostic tools

This chapter gives an overview of the diagnostics tools supported by HP ProLiant DL145 Generation 3 server.

Overview of available diagnostic tools

The following utilities assist in diagnosing problems, testing hardware, and monitoring and managing server operations.

Table 3 Diagnostic tools

Tool	What it is	How to run it
User Diagnostics	A tool to assist testing and/or verifying operation of hardware. If problems are found, the diagnostics package isolates failures down to the replaceable part, whenever possible.	Diagnostics and utilities must be accessed when a system configuration error is detected during Power-On Self-Test (POST). Check the HP website at **www.hp.com** for the most recent version of the *HP ProLiant DL145 Generation 3 User Diagnostics*.
IPMI Event Log	A log generated by the management controller when it detects significant or critical system management events. This includes messages for events such as temperature threshold exceeded, voltage threshold exceeded, power fault, and so on.	To view the IPMI event log: **1** Run the *Phoenix*BIOS Setup Utility by pressing the **F10** key during POST. **2** In the Advanced menu screen, select the **IPMI** submenu and press **Enter**. **3** Select **System Event Log** and press **Enter**. **4** Select **System Event Log (list mode)** and press **Enter**. Refer to the *HP ProLiant DL145 Generation 3 Server Software Configuration Guide* for more information.
*Phoenix*BIOS Setup Utility	A hardware configuration program used to manage memory, processor, and system settings.	Run the Setup Utility by pressing the **F10** key during POST. Refer to the *HP ProLiant DL145 Generation 3 Server Software Configuration Guide* for more information.
HP ROMPaq Utility	A utility that upgrades the current system ROM.	Run this utility from the HP ROMPaq Utility bootable floppy after powering up the server. Check the HP website at **www.hp.com** for the most recent version of the HP ProLiant DL145 Generation 3 ROM.

NOTE: For more information about the diagnostic tools described in this table, and other tools available for your server, refer to the Servers Troubleshooting Guide located inside the *HP ProLiant DL145 Generation 3 Server Support CD*. For the most recent version of this guide, go to **www.hp.com**.

Connectors, buttons, and LEDs

This chapter contains illustrations and tables identifying and describing the connectors, buttons, and LED indicators located on the front panel, rear panel, system board, front panel board, and hard drives of the HP ProLiant DL145 Generation 3 server.

Connectors and components

This section identifies the connectors and components on the front and rear panels of the server, as well as on the system and front panel boards.

Front panel components

Figure 72 Front panel components

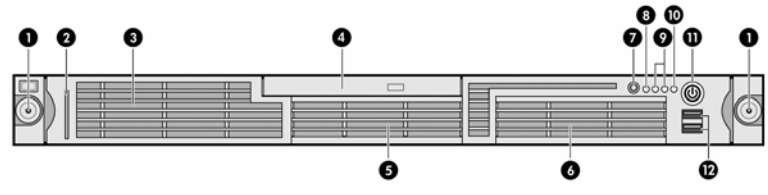

Item	Icon	Component
1		Thumbscrews for the front bezel
2		Serial number pull tab
3		Ventilation holes
4		Optical drive bay
5		Hard disk drive (HDD) bay 1
6		HDD bay 2
7	UID	Unit identification (UID) button with LED indicator (blue)
8		System health LED indicator (amber)
9		Activity LED indicators for NIC 1 and NIC 2 (green)
10		HDD activity LED indicator (green)
11		Power button with LED indicator (bicolor: green and amber)
12		USB 2.0 ports

Rear panel components

Figure 73 Rear panel components

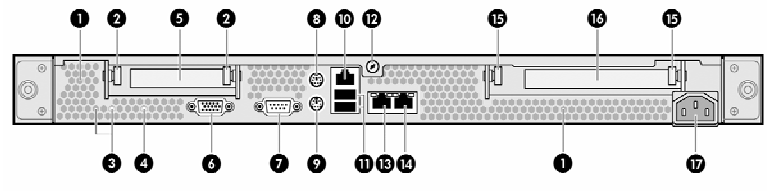

Item	Icon	Component
1		Ventilation holes
2		Thumbscrews for the low-profile riser board assembly
3	UID	UID button and separate LED indicator (blue)
4		Non-Maskable Interrupt (NMI) button (recessed)
5		Low-profile riser board assembly slot cover

Item	Icon	Component
6		Video port (blue)
7		Serial port
8		PS/2 mouse port (green)
9		PS/2 keyboard port (purple)
10	LO100	10/100 Mbps LAN port for IPMI management (RJ-45)
11		USB 2.0 ports (black)
12		Captive screw for the top cover
13		GbE LAN port for NIC 1 (RJ-45)
14		GbE LAN port for NIC 2 (RJ-45)
15		Thumbscrews for the full-sized riser board assembly
16		Full-sized riser board assembly slot cover
17		Power supply cord
NOTE:	Each LAN port has its own LED indicators for activity/link status and network speed.	

System board components

Figure 74 System board components

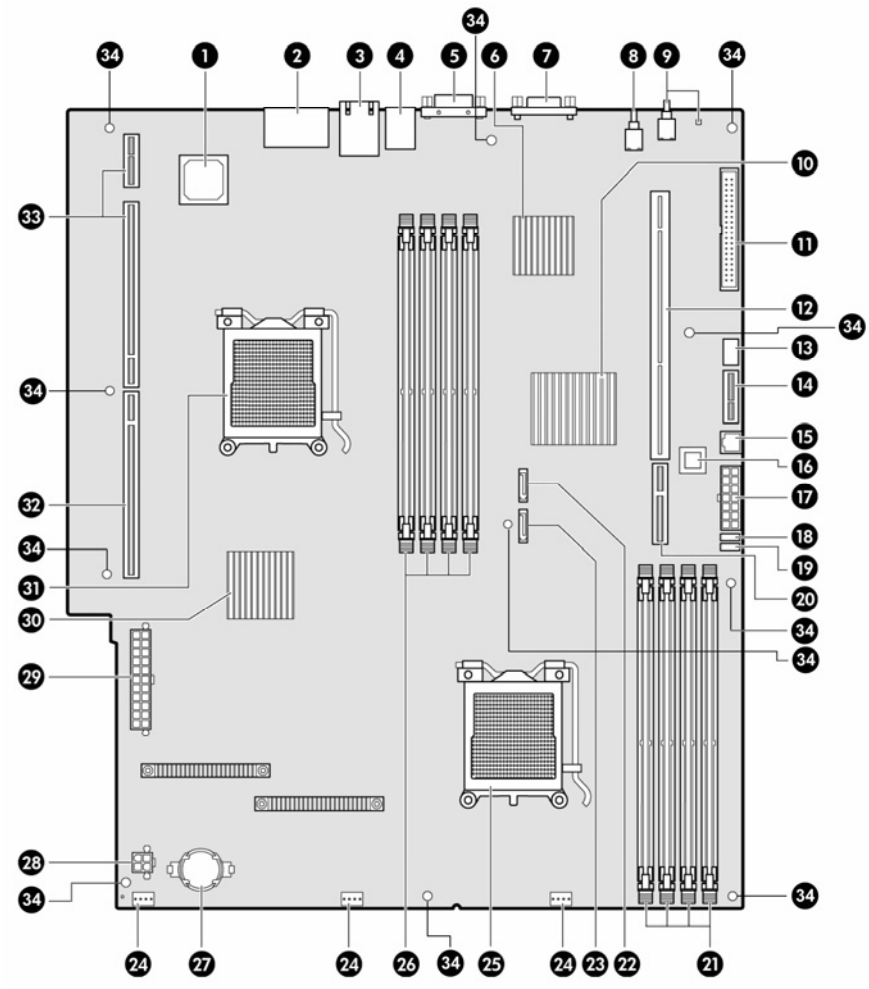

Table 4 System board components

Item	Component code	Component
1	—	Broadcom BCM5715 dual gigabit Ethernet controller
2	J3	GbE LAN ports for NIC 1 and NIC 2
3	J5	USB 2.0 ports and 10/100 Mbps LAN port for IPMI management
4	J4	PS/2 keyboard and mouse ports
5	J2	Serial port
6	—	Server Engines Pilot service management controller (SMC) chip
7	J1	Video port
8	SW3	NMI button (recessed)
9	SW1	UID button and separate LED indicator (blue)
10	—	Broadcom BCM5785 HyperTransport-connected system I/O hub and PCI-X bridge
11	J7	IDE data cable connector
12	J10	64-bit/133 MHz PCI-X slot
13	J11	26-pin front panel board power connector
14	J12	Debug port
15	J13	6-pin connector for the front USB 2.0 ports
16	U70	BIOS flash Electrically Erasable Programmable Read-Only Memory (EEPROM)
17	P22	14-pin system board power connector
18	P56	3-pin crisis recovery setting jumper block
19	P57	3-pin CMOS setting jumper block
20	J15	PCI Express x4 slot
21	DIMM5 to DIMM8 (left to right)	Processor 2 socket (U55) DIMM slots
22	P19	7-pin 150-MBps SATA 1 connector
23	P23	7-pin 150-MBps SATA 2 connector
24	P47, P48, and P49 (left to right)	4-pin system fan connectors
25	U55	AMD Opteron 1207-pin processor 2 socket
26	DIMM1 to DIMM4 (left to right)	Processor 1 socket (U42) DIMM slots
27	XBAT1	3 V internal lithium system battery
28	P41	4-pin hard drive/optical drive power cable connector
29	P34	22-pin system board power connector
30	U49	Broadcom BCM2100 HyperTransport tunnel and PCI Express bridge
31	U42	AMD Opteron 1207-pin processor 1 socket
32	J14	PCI Express x16 slot
33	J6 and J9	1 GHz, 16x16 HTX slot
34	—	Mounting Holes

System buttons

The system board contains the rear UID button (SW1) and the NMI button (SW3). Both are accessible from the rear panel; the NMI button is recessed. Figure 73 on page 62 shows the locations of both buttons on the rear panel; Figure 74 on page 63 shows the locations on the system board.

The front panel board contains the front UID button, which is accessible from the front panel. Figure 72 on page 62 shows the location of the UID button on the front panel; Figure 75 on page 66 shows the locations on the front panel board.

UID button

When performing maintenance on multiple servers in a rack or similar configuration, you can use the UID buttons on the front and rear panels to mark a server by changing the state of the blue UID LEDs. Push either UID button to toggle both UID LEDs on and off.

NMI button

If the system crashes or stops operating properly, you can use the NMI button (SW3) to mechanically force the server to issue a non-maskable interrupt. This performs a memory dump—writing the contents of the processor registers and RAM to a network server or to diskettes. This memory dump can later be analyzed to determine the cause of the problem.

The NMI button is a recessed button on the rear panel that is accessible with a small tool without removing the chassis cover.

NOTE: Use of the NMI button is not supported in all network operating systems (NOS). Currently, the NMI feature is not available for systems running on Solaris and Linux operating systems.

System jumpers

The system board has two jumpers — the crisis recovery jumper (P56) and the CMOS jumper (P57). Figure 74 on page 63 shows the locations on the system board. The following tables show the jumper settings.

Table 5 Crisis recovery jumper (P56) settings

Jumper setting	Function
PARK 	Normal boot
PARK 	Boot block enabled

Table 6 CMOS jumper (P57) settings

Jumper setting	Function
PARK 	Normal CMOS settings
PARK 	Clear CMOS settings and restore system defaults

Front panel board components

Figure 75 shows and describes the components on the front panel board. This board is linked to the system board through the front panel board power cable and the front panel board USB cable. The front panel board installs in the chassis upside down.

Figure 75 Front panel board components

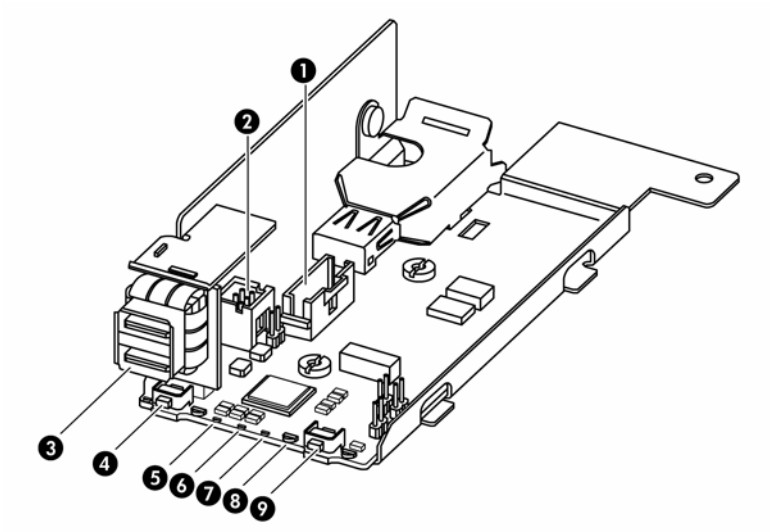

Item	Component code	Component
1	J1	Power connector
2	J2	6-pin connector for USB 2.0 ports
3		Riser board with USB 2.0 ports
4		Power status button and LED indicator
5		HDD activity LED indicator
6		Activity LED indicator for NIC 1
7		Activity LED indicator for NIC 2
8		System health LED indicator
9		UID button and LED indicator

Front panel board cable routing

The front panel board power cable connects to the J11 connector on the system board; the front panel board USB cable connects to the J13 connector on the system board. Figure 76 shows the routing for both cables.

Figure 76 Front panel board cable routing

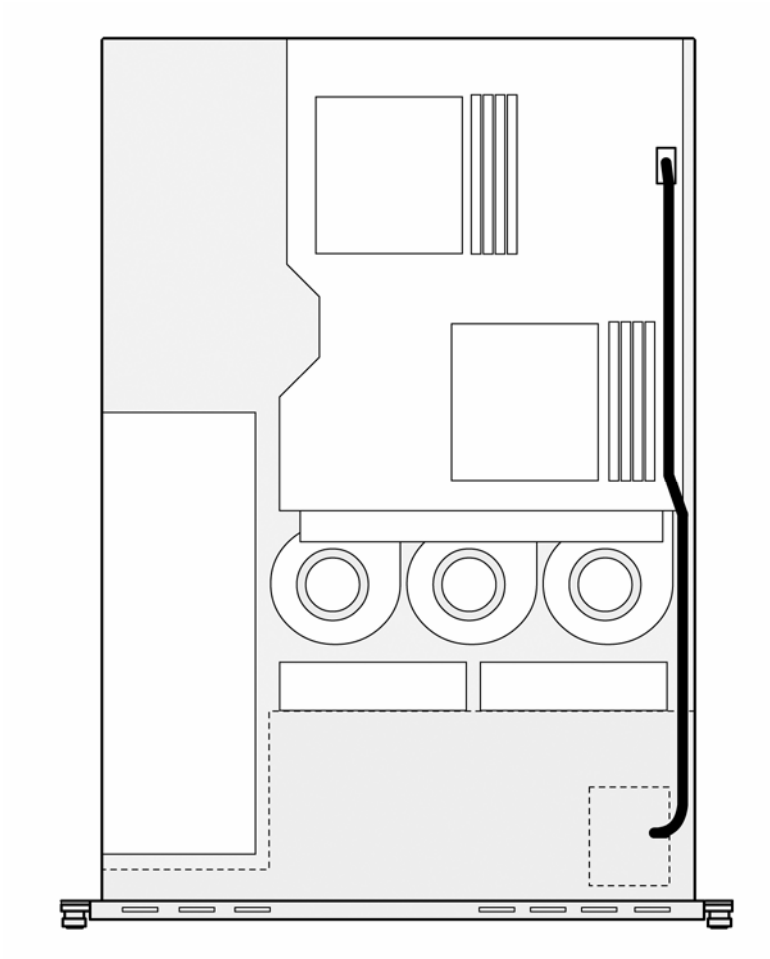

Description	Connections
Front panel board power cable	• J11 on the system board • Power connector on the front panel board
Front panel board USB cable	• J13 on the system board • USB connector on the front panel board

CAUTION: Route the front panel board cables neatly. If necessary, secure them using the pre-installed cable clips located on the chassis base. The cables should be routed in a position where they will not be pinched or crimped by the top cover, nor should they hamper proper airflow inside the chassis.

Status LED indicators

This section describes the internal and external status LED indicators located on the front panel, rear panel, and system board. These LED indicators aid in problem diagnosis by indicating the status of system components and operations of the server.

Front panel LED indicators

The status LED indicators on the front panel allow constant monitoring of basic system functions while the server is operating. These LEDs are mounted on the front panel board. Figure 77 shows and describes the function of these LEDs.

Figure 77 Front panel LED indicators

Item	Icon	Component	Status	Description
1	UID	UID LED indicator	Blue	A UID button has been pressed to toggle the indicator on.
			Off	A UID button has been pressed to toggle the indicator off.
2		System health LED indicator	Off	System health is normal.
			Solid amber	A system threshold has been breached. This may be any of the following: • At least one fan failure has occurred. • A voltage regulator error has occurred. • At least one temperature sensor has reached the critical level. • A power supply unit error has occurred.
3		Activity LED indicators for NIC 1 and NIC 2	Solid green	An active network link exists.
			Flashing green	An active network link and ongoing network data activity exist.
			Off	No network link or network data activity exists.
4		HDD activity LED indicator	Flashing green	Ongoing drive activity (non-hot-plug SATA drives only)
			Off	No drive activity exists.
5		Power status LED indicator (recessed underneath the power button)	Green	The server has AC power and is powered on.
			Amber	The server has AC power and is in standby mode.
			Off	The server is powered off (AC power disconnected).

Rear panel LED indicators

The status LED indicators located on the rear panel help monitor network activity and unit identification. Figure 78 shows and describes the function of these LEDs.

Figure 78 Rear panel LED indicators

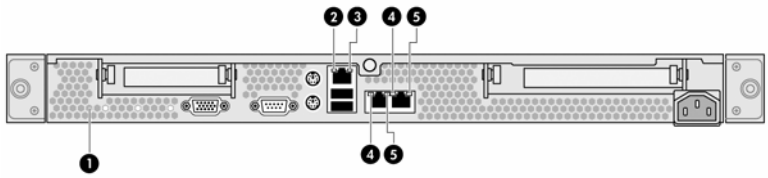

Item	Component	Status	Description
1	UID LED indicator	Blue	A UID button has been pressed to toggle the indicator on.
		Off	A UID button has been pressed to toggle the indicator off.
2	Link status LED indicator for the 10/100 Mbps LAN port	Solid green	A valid network link exists.
		Off	No network link detected.
3	Activity status LED indicator for the 10/100 Mbps LAN port	Flashing amber	Network data activity was detected within the preceding one second.
		Off	No network data activity was detected within the preceding one second.
4	NIC link status LED	Solid green	A valid network link exists.

Item	Component	Status	Description
	indicator	Off	No network link detected.
5	NIC activity LED indicator	Flashing amber	Network data activity was detected within the preceding one second.
		Off	No network data activity was detected within the preceding one second.

System board LED indicators

The system board has one internal LED, shown in Figure 74 on page 63 (callout 9).

Table 7 System board LEDs

Component code	Component	Status	Description
SW1	Rear UID LED indicator (blue)	On	A UID button has been pressed to toggle the indicator on.
SW1	Rear UID LED indicator (blue)	Off	A UID button has been pressed to toggle the indicator off.

Physical and operating specifications

This chapter provides physical and operating specifications for the HP ProLiant DL145 Generation 3 server. The specifications for the following items are provided:

- System unit
- Memory
- Processor

System unit

Table 8 Hardware specifications

Item	Description
Processor socket	Dual AMD 1207-pin socket
Processor type	AMD Opteron processor
Core logic chipset	Broadcom ServerWorks HT-2100 Broadcom ServerWorks HT-1000
Super I/O chipset	ServerEngines Pilot SMC
Hardware monitoring chipset	ServerEngines Pilot SMC
Baseboard management controller	ServerEngines Pilot SMC
Gigabit Ethernet controller	Broadcom 5715 dual gigabit Ethernet controller
Onboard 10/100 Mbps LAN controller	ServerEngines Pilot SMC
Memory controller	Integrated in the AMD Opteron processor
Storage controller	HT-1000 Broadcom BCM5785
Graphics controller	ServerEngines Pilot SMC
I/O subsystem	Four system board-level expansion slots: • J6 and J9 — Support a full-sized 1 GHz, 16x16 HTX expansion board installed on a HTX riser board • J14 — Supports a full-sized PCI Express x16 expansion board installed on a PCI Express x16 riser board • J10 — Supports a low-profile 64-bit, 133 MHz PCI-X expansion board installed on a PCI-X riser board • J15 — Supports a low-profile PCI Express x4 expansion board installed on a PCI Express x4 riser board
Memory	Eight DDR-2 DIMM slots, 4 DIMMs per processor Maximum system memory capacity: 16 GB (2 GB per DIMM)
Media storage	• Two HDD bays for SATA or SAS drives • Optical drive bay for 9.5-mm CD-ROM or CD/DVD combo drive
I/O ports	• PS/2 keyboard port • PS/2 mouse port • Four USB 2.0 ports (two on the front panel, two on the rear panel) • Video port • Serial port • Three LAN ports
Status LED indicators	Front panel: • UID • System health • Activity for NIC 1 and NIC 2 • HDD activity • Power status Rear panel: • UID • LAN activity/link status • LAN network speed

Table 8 Hardware specifications

Item	Description
Power supply unit (PSU)	1U 650-watt PSU
System management function	IPMI 2.0-compliant with dedicated 10/100 Mbps LAN port for online system health monitoring
Thermal solution	• Three system fans for the memory modules, processors, system chipsets, and expansion slots • Two PSU fans

Table 9 Physical dimensions

Item	Description
System board dimensions	
Length	381 mm (15 in)
Width	325 mm (12.8 in)
Server dimensions	
Height	43.2 mm (1.7 in)
Width	426.7 mm (16.786 in)
Depth	675.6 mm (26.6 in)
Server weight (maximum configuration)	15.87 kg (35 lb)

Table 10 Environmental specifications

Item	Description
System inlet temperature	
Operating	10° to 35° C (50° to 95° F)
Non-operating (unpacked)	0° to 50° C (32° to 122° F)
Storage (unpacked)	5° to 40° C (41° to 104° F)
Shipping (packed)	-40° to 70° C (-40° to 158° F)
NOTE: System performance may be reduced if operating above 30° C (86° F).	
NOTE: Operating temperature has an altitude derating of 1° C per 300 m to 3000 m.	
Relative humidity (non-condensing)	
Operating	10% to 90%, 28° C (82.4° F) maximum wet-bulb temperature
Non-operating	5% to 95%, 38.7° C (101.7° F) maximum wet-bulb temperature
Altitude	
Operating	3050 m (10,000 ft). This value may be limited by the type and number of options installed.
Non-operating	9144 m (30,000 ft)
NOTE: The maximum allowable altitude change rate is 457 m/min (1500 ft/min)	
Acoustic noise	
Operating minimum (random seeks to fixed disks)	<6.4 Bels @ <25° C (77° F)

To review typical system power ratings, use the Active Answers Power Calculator, which is available online at **http://h30099.www3.hp.com/configurator/powercalcs.asp**.

Table 11 Power supply requirements

Item	Description
Model	API4FS18+490
PSU type	1U 650 W
Input type	AC

Table 11 Power supply requirements

Item	Description
Input requirements	
Input voltage range	90 to 264 VAC
Normal voltage range	100 to 240 VAC
Input frequency range	47 to 63 Hz
Inrush current	Less than 100 A peak

Memory

Table 12 Memory specifications

Item	Description
Size	512 MB, 1 GB, and 2 GB
Speed	PC2-5300
Type	DDR-2 ECC DIMMs

Processor

Table 13 Processor specifications

Item	Description
Processor type	64-bit AMD Opteron
Operating frequency	1.8, 2.0, 2.2, 2.4, and 2.8 GHz
On-die L2 cache	2 MB
Cores	Single- and dual-core
Socket type	1207-pin
Wattage	Up to 120 W
Process technology	.09 micron silicon-on-insulator (SOI)
Package	Ceramic Micro Pin Grid Array (mPGA)

Gigabit Ethernet controller

Table 14 Gigabit Ethernet controller

Item	Description
Model	Broadcom 5715 dual gigabit Ethernet controller
Network interface	10/100/1000Base-T Ethernet
Media interface controller (MAC)	IEEE 802.3-compliant
System interface	PCI Express x4
Connector	RJ-45
Industry-compliant manageability features	Wake-on-LAN (WOL)

Index

R

S

T

U

W