HP ProLiant ML150 Generation 5 Server

Maintenance and Service Guide

Part number 457538-004
Fourth edition August 2008

Legal notices

Contents

1 Customer self repair

HP products are designed with many Customer Self Repair (CSR) parts to minimize repair time and allow for greater flexibility in performing defective parts replacement. If during the diagnosis period HP (or HP service providers or service partners) identifies that the repair can be accomplished by the use of a CSR part, HP will ship that part directly to you for replacement. There are two categories of CSR parts:

- **Mandatory**—Parts for which customer self repair is mandatory. If you request HP to replace these parts, you will be charged for the travel and labor costs of this service.
- **Optional**—Parts for which customer self repair is optional. These parts are also designed for customer self repair. If, however, you require that HP replace them for you, there may or may not be additional charges, depending on the type of warranty service designated for your product.

NOTE: Some HP parts are not designed for customer self repair. In order to satisfy the customer warranty, HP requires that an authorized service provider replace the part. These parts are identified as "No" in the Illustrated Parts Catalog.

Based on availability and where geography permits, CSR parts will be shipped for next business day delivery. Same day or four-hour delivery may be offered at an additional charge where geography permits. If assistance is required, you can call the HP Technical Support Center and a technician will help you over the telephone. HP specifies in the materials shipped with a replacement CSR part whether a defective part must be returned to HP. In cases where it is required to return the defective part to HP, you must ship the defective part back to HP within a defined period of time, normally five (5) business days. The defective part must be returned with the associated documentation in the provided shipping material. Failure to return the defective part may result in HP billing you for the replacement. With a customer self repair, HP will pay all shipping and part return costs and determine the courier/carrier to be used.

For more information about HP's Customer Self Repair program, contact your local service provider. For the North American program, refer to the HP website (**http://www.hp.com/go/selfrepair**).

Parts only warranty service

Your HP Limited Warranty may include a parts only warranty service. Under the terms of parts only warranty service, HP will provide replacement parts free of charge.

For parts only warranty service, CSR part replacement is mandatory. If you request HP to replace these parts, you will be charged for the travel and labor costs of this service.

Réparation par le client (CSR)

Les produits HP comportent de nombreuses pièces CSR (Customer Self Repair = réparation par le client) afin de minimiser les délais de réparation et faciliter le remplacement des pièces défectueuses. Si pendant la période de diagnostic, HP (ou ses partenaires ou mainteneurs agréés) détermine que la réparation peut être effectuée à l'aide d'une pièce CSR, HP vous l'envoie directement. Il existe deux catégories de pièces CSR:

- **Obligatoire** - Pièces pour lesquelles la réparation par le client est obligatoire. Si vous demandez à HP de remplacer ces pièces, les coûts de déplacement et main d'œuvre du service vous seront facturés.
- **Facultatif** - Pièces pour lesquelles la réparation par le client est facultative. Ces pièces sont également conçues pour permettre au client d'effectuer lui-même la réparation. Toutefois, si vous demandez à HP de remplacer ces pièces, l'intervention peut ou non vous être facturée, selon le type de garantie applicable à votre produit.

REMARQUE: Certaines pièces HP ne sont pas conçues pour permettre au client d'effectuer lui-même la réparation. Pour que la garantie puisse s'appliquer, HP exige que le remplacement de la pièce soit effectué par un Mainteneur Agréé. Ces pièces sont identifiées par la mention "Non" dans le Catalogue illustré.

Les pièces CSR sont livrées le jour ouvré suivant, dans la limite des stocks disponibles et selon votre situation géographique. Si votre situation géographique le permet et que vous demandez une livraison le jour même ou dans les 4 heures, celle-ci vous sera facturée. Pour bénéficier d'une assistance téléphonique, appelez le Centre d'assistance technique HP. Dans les documents envoyés avec la pièce de rechange CSR, HP précise s'il est nécessaire de lui retourner la pièce défectueuse. Si c'est le cas, vous devez le faire dans le délai indiqué, généralement cinq (5) jours ouvrés. La pièce et sa documentation doivent être retournées dans l'emballage fourni. Si vous ne retournez pas la pièce défectueuse, HP se réserve le droit de vous facturer les coûts de remplacement. Dans le cas d'une pièce CSR, HP supporte l'ensemble des frais d'expédition et de retour, et détermine la société de courses ou le transporteur à utiliser.

Pour plus d'informations sur le programme CSR de HP, contactez votre Mainteneur Agrée local. Pour plus d'informations sur ce programme en Amérique du Nord, consultez le site Web HP (**http://www.hp.com/go/selfrepair**).

Service de garantie "pièces seules"

Votre garantie limitée HP peut inclure un service de garantie "pièces seules". Dans ce cas, les pièces de rechange fournies par HP ne sont pas facturées.

Dans le cadre de ce service, la réparation des pièces CSR par le client est obligatoire. Si vous demandez à HP de remplacer ces pièces, les coûts de déplacement et main d'œuvre du service vous seront facturés.

Riparazione da parte del cliente

Per abbreviare i tempi di riparazione e garantire una maggiore flessibilità nella sostituzione di parti difettose, i prodotti HP sono realizzati con numerosi componenti che possono essere riparati direttamente dal cliente (CSR, Customer Self Repair). Se in fase di diagnostica HP (o un centro di servizi o di assistenza HP) identifica il guasto come riparabile mediante un ricambio CSR, HP lo spedirà direttamente al cliente per la sostituzione. Vi sono due categorie di parti CSR:

- **Obbligatorie** – Parti che devono essere necessariamente riparate dal cliente. Se il cliente ne affida la riparazione ad HP, deve sostenere le spese di spedizione e di manodopera per il servizio.
- **Opzionali** – Parti la cui riparazione da parte del cliente è facoltativa. Si tratta comunque di componenti progettati per questo scopo. Se tuttavia il cliente ne richiede la sostituzione ad HP, potrebbe dover sostenere spese addizionali a seconda del tipo di garanzia previsto per il prodotto.

NOTA: alcuni componenti HP non sono progettati per la riparazione da parte del cliente. Per rispettare la garanzia, HP richiede che queste parti siano sostituite da un centro di assistenza autorizzato. Tali parti sono identificate da un "No" nel Catalogo illustrato dei componenti.

In base alla disponibilità e alla località geografica, le parti CSR vengono spedite con consegna entro il giorno lavorativo seguente. La consegna nel giorno stesso o entro quattro ore è offerta con un supplemento di costo solo in alcune zone. In caso di necessità si può richiedere l'assistenza telefonica di un addetto del centro di supporto tecnico HP. Nel materiale fornito con una parte di ricambio CSR, HP specifica se il cliente deve restituire dei componenti. Qualora sia richiesta la resa ad HP del componente difettoso, lo si deve spedire ad HP entro un determinato periodo di tempo, generalmente cinque (5) giorni lavorativi. Il componente difettoso deve essere restituito con la documentazione associata nell'imballo di spedizione fornito. La mancata restituzione del componente può comportare la fatturazione del ricambio da parte di HP. Nel caso di riparazione da parte del cliente, HP sostiene tutte le spese di spedizione e resa e sceglie il corriere/vettore da utilizzare.

Per ulteriori informazioni sul programma CSR di HP contattare il centro di assistenza di zona. Per il programma in Nord America fare riferimento al sito Web HP (**http://www.hp.com/go/selfrepair**).

Servizio di garanzia per i soli componenti

La garanzia limitata HP può includere un servizio di garanzia per i soli componenti. Nei termini di garanzia del servizio per i soli componenti, HP fornirà gratuitamente le parti di ricambio.

Per il servizio di garanzia per i soli componenti è obbligatoria la formula CSR che prevede la riparazione da parte del cliente. Se il cliente invece richiede la sostituzione ad HP, dovrà sostenere le spese di spedizione e di manodopera per il servizio.

Customer Self Repair

HP Produkte enthalten viele CSR-Teile (Customer Self Repair), um Reparaturzeiten zu minimieren und höhere Flexibilität beim Austausch defekter Bauteile zu ermöglichen. Wenn HP (oder ein HP Servicepartner) bei der Diagnose feststellt, dass das Produkt mithilfe eines CSR-Teils repariert werden kann, sendet Ihnen HP dieses Bauteil zum Austausch direkt zu. CSR-Teile werden in zwei Kategorien unterteilt:

- **Zwingend –** Teile, für die das Customer Self Repair-Verfahren zwingend vorgegeben ist. Wenn Sie den Austausch dieser Teile von HP vornehmen lassen, werden Ihnen die Anfahrt- und Arbeitskosten für diesen Service berechnet.
- **Optional –** Teile, für die das Customer Self Repair-Verfahren optional ist. Diese Teile sind auch für Customer Self Repair ausgelegt. Wenn Sie jedoch den Austausch dieser Teile von HP vornehmen lassen möchten, können bei diesem Service je nach den für Ihr Produkt vorgesehenen Garantiebedingungen zusätzliche Kosten anfallen.

HINWEIS: Einige Teile sind nicht für Customer Self Repair ausgelegt. Um den Garantieanspruch des Kunden zu erfüllen, muss das Teil von einem HP Servicepartner ersetzt werden. Im illustrierten Teilekatalog sind diese Teile mit „No“ bzw. „Nein“ gekennzeichnet.

CSR-Teile werden abhängig von der Verfügbarkeit und vom Lieferziel am folgenden Geschäftstag geliefert. Für bestimmte Standorte ist eine Lieferung am selben Tag oder innerhalb von vier Stunden gegen einen Aufpreis verfügbar. Wenn Sie Hilfe benötigen, können Sie das HP technische Support Center anrufen und sich von einem Mitarbeiter per Telefon helfen lassen. Den Materialien, die mit einem CSR-Ersatzteil geliefert werden, können Sie entnehmen, ob das defekte Teil an HP zurückgeschickt werden muss. Wenn es erforderlich ist, das defekte Teil an HP zurückzuschicken, müssen Sie dies innerhalb eines vorgegebenen Zeitraums tun, in der Regel innerhalb von fünf (5) Geschäftstagen. Das defekte Teil muss mit der zugehörigen Dokumentation in der Verpackung zurückgeschickt werden, die im Lieferumfang enthalten ist. Wenn Sie das defekte Teil nicht zurückschicken, kann HP Ihnen das Ersatzteil in Rechnung stellen. Im Falle von Customer Self Repair kommt HP für alle Kosten für die Lieferung und Rücksendung auf und bestimmt den Kurier-/Frachtdienst.

Weitere Informationen über das HP Customer Self Repair Programm erhalten Sie von Ihrem Servicepartner vor Ort. Informationen über das CSR-Programm in Nordamerika finden Sie auf der HP Website unter (**http://www.hp.com/go/selfrepair**).

Parts-only Warranty Service (Garantieservice ausschließlich für Teile)

Ihre HP Garantie umfasst möglicherweise einen Parts-only Warranty Service (Garantieservice ausschließlich für Teile). Gemäß den Bestimmungen des Parts-only Warranty Service stellt HP Ersatzteile kostenlos zur Verfügung.

Für den Parts-only Warranty Service ist das CSR-Verfahren zwingend vorgegeben. Wenn Sie den Austausch dieser Teile von HP vornehmen lassen, werden Ihnen die Anfahrt- und Arbeitskosten für diesen Service berechnet.

Reparaciones del propio cliente

Los productos de HP incluyen muchos componentes que el propio usuario puede reemplazar (*Customer Self Repair*, CSR) para minimizar el tiempo de reparación y ofrecer una mayor flexibilidad a la hora de realizar sustituciones de componentes defectuosos. Si, durante la fase de diagnóstico, HP (o los proveedores o socios de servicio de HP) identifica que una reparación puede llevarse a cabo mediante el uso de un componente CSR, HP le enviará dicho componente directamente para que realice su sustitución. Los componentes CSR se clasifican en dos categorías:

- **Obligatorio:** componentes para los que la reparación por parte del usuario es obligatoria. Si solicita a HP que realice la sustitución de estos componentes, tendrá que hacerse cargo de los gastos de desplazamiento y de mano de obra de dicho servicio.
- **Opcional:** componentes para los que la reparación por parte del usuario es opcional. Estos componentes también están diseñados para que puedan ser reparados por el usuario. Sin embargo, si precisa que HP realice su sustitución, puede o no conllevar costes adicionales, dependiendo del tipo de servicio de garantía correspondiente al producto.

NOTA: Algunos componentes no están diseñados para que puedan ser reparados por el usuario. Para que el usuario haga valer su garantía, HP pone como condición que un proveedor de servicios autorizado realice la sustitución de estos componentes. Dichos componentes se identifican con la palabra "No" en el catálogo ilustrado de componentes.

Según la disponibilidad y la situación geográfica, los componentes CSR se enviarán para que lleguen a su destino al siguiente día laborable. Si la situación geográfica lo permite, se puede solicitar la entrega en el mismo día o en cuatro horas con un coste adicional. Si precisa asistencia técnica, puede llamar al Centro de asistencia técnica de HP y recibirá ayuda telefónica por parte de un técnico. Con el envío de materiales para la sustitución de componentes CSR, HP especificará si los componentes defectuosos deberán devolverse a HP. En aquellos casos en los que sea necesario devolver algún componente a HP, deberá hacerlo en el periodo de tiempo especificado, normalmente cinco días laborables. Los componentes defectuosos deberán devolverse con toda la documentación relacionada y con el embalaje de envío. Si no enviara el componente defectuoso requerido, HP podrá cobrarle por el de sustitución. En el caso de todas sustituciones que lleve a cabo el cliente, HP se hará cargo de todos los gastos de envío y devolución de componentes y escogerá la empresa de transporte que se utilice para dicho servicio.

Para obtener más información acerca del programa de Reparaciones del propio cliente de HP, póngase en contacto con su proveedor de servicios local. Si está interesado en el programa para Norteamérica, visite la página web de HP siguiente (**http://www.hp.com/go/selfrepair**).

Servicio de garantía exclusivo de componentes

La garantía limitada de HP puede que incluya un servicio de garantía exclusivo de componentes. Según las condiciones de este servicio exclusivo de componentes, HP le facilitará los componentes de repuesto sin cargo adicional alguno.

Para este servicio de garantía exclusivo de componentes, es obligatoria la sustitución de componentes por parte del usuario (CSR). Si solicita a HP que realice la sustitución de estos componentes, tendrá que hacerse cargo de los gastos de desplazamiento y de mano de obra de dicho servicio.

Customer Self Repair

Veel onderdelen in HP producten zijn door de klant zelf te repareren, waardoor de reparatieduur tot een minimum beperkt kan blijven en de flexibiliteit in het vervangen van defecte onderdelen groter is. Deze onderdelen worden CSR-onderdelen (Customer Self Repair) genoemd. Als HP (of een HP Service Partner) bij de diagnose vaststelt dat de reparatie kan worden uitgevoerd met een CSR-onderdeel, verzendt HP dat onderdeel rechtstreeks naar u, zodat u het defecte onderdeel daarmee kunt vervangen. Er zijn twee categorieën CSR-onderdelen:

- **Verplicht:** Onderdelen waarvoor reparatie door de klant verplicht is. Als u HP verzoekt deze onderdelen voor u te vervangen, worden u voor deze service reiskosten en arbeidsloon in rekening gebracht.
- **Optioneel:** Onderdelen waarvoor reparatie door de klant optioneel is. Ook deze onderdelen zijn ontworpen voor reparatie door de klant. Als u echter HP verzoekt deze onderdelen voor u te vervangen, kunnen daarvoor extra kosten in rekening worden gebracht, afhankelijk van het type garantieservice voor het product.

OPMERKING: Sommige HP onderdelen zijn niet ontwikkeld voor reparatie door de klant. In verband met de garantievoorwaarden moet het onderdeel door een geautoriseerde Service Partner worden vervangen. Deze onderdelen worden in de geïllustreerde onderdelencatalogus aangemerkt met "Nee".

Afhankelijk van de leverbaarheid en de locatie worden CSR-onderdelen verzonden voor levering op de eerstvolgende werkdag. Levering op dezelfde dag of binnen vier uur kan tegen meerkosten worden aangeboden, indien dit mogelijk is gezien de locatie. Indien assistentie gewenst is, belt u een HP Service Partner om via de telefoon technische ondersteuning te ontvangen. HP vermeldt in de documentatie bij het vervangende CSR-onderdeel of het defecte onderdeel aan HP moet worden geretourneerd. Als het defecte onderdeel aan HP moet worden teruggezonden, moet u het defecte onderdeel binnen een bepaalde periode, gewoonlijk vijf (5) werkdagen, retourneren aan HP. Het defecte onderdeel moet met de bijbehorende documentatie worden geretourneerd in het meegeleverde verpakkingsmateriaal. Als u het defecte onderdeel niet terugzendt, kan HP u voor het vervangende onderdeel kosten in rekening brengen. Bij reparatie door de klant betaalt HP alle verzendkosten voor het vervangende en geretourneerde onderdeel en kiest HP zelf welke koerier/transportonderneming hiervoor wordt gebruikt.

Neem contact op met een Service Partner voor meer informatie over het Customer Self Repair programma van HP. Informatie over Service Partners vindt u op de HP website (**http://www.hp.com/go/selfrepair**).

Garantieservice "Parts Only"

Het is mogelijk dat de HP garantie alleen de garantieservice "Parts Only" omvat. Volgens de bepalingen van de Parts Only garantieservice zal HP kosteloos vervangende onderdelen ter beschikking stellen.

Voor de Parts Only garantieservice is vervanging door CSR-onderdelen verplicht. Als u HP verzoekt deze onderdelen voor u te vervangen, worden u voor deze service reiskosten en arbeidsloon in rekening gebracht.

Reparo feito pelo cliente

Os produtos da HP são projetados com muitas peças para reparo feito pelo cliente (CSR) de modo a minimizar o tempo de reparo e permitir maior flexibilidade na substituição de peças com defeito. Se, durante o período de diagnóstico, a HP (ou fornecedores/parceiros de serviço da HP) concluir que o reparo pode ser efetuado pelo uso de uma peça CSR, a peça de reposição será enviada diretamente ao cliente. Existem duas categorias de peças CSR:

- **Obrigatória** – Peças cujo reparo feito pelo cliente é obrigatório. Se desejar que a HP substitua essas peças, serão cobradas as despesas de transporte e mão-de-obra do serviço.
- **Opcional** – Peças cujo reparo feito pelo cliente é opcional. Essas peças também são projetadas para o reparo feito pelo cliente. No entanto, se desejar que a HP as substitua, pode haver ou não a cobrança de taxa adicional, dependendo do tipo de serviço de garantia destinado ao produto.

OBSERVAÇÃO: Algumas peças da HP não são projetadas para o reparo feito pelo cliente. A fim de cumprir a garantia do cliente, a HP exige que um técnico autorizado substitua a peça. Essas peças estão identificadas com a marca "No" (Não), no catálogo de peças ilustrado.

Conforme a disponibilidade e o local geográfico, as peças CSR serão enviadas no primeiro dia útil após o pedido. Onde as condições geográficas permitirem, a entrega no mesmo dia ou em quatro horas pode ser feita mediante uma taxa adicional. Se precisar de auxílio, entre em contato com o Centro de suporte técnico da HP para que um técnico o ajude por telefone. A HP especifica nos materiais fornecidos com a peça CSR de reposição se a peça com defeito deve ser devolvida à HP. Nos casos em que isso for necessário, é preciso enviar a peça com defeito à HP dentro do período determinado, normalmente cinco (5) dias úteis. A peça com defeito deve ser enviada com a documentação correspondente no material de transporte fornecido. Caso não o faça, a HP poderá cobrar a reposição. Para as peças de reparo feito pelo cliente, a HP paga todas as despesas de transporte e de devolução da peça e determina a transportadora/serviço postal a ser utilizado.

Para obter mais informações sobre o programa de reparo feito pelo cliente da HP, entre em contato com o fornecedor de serviços local. Para o programa norte-americano, visite o site da HP (**http://www.hp.com/go/selfrepair**).

Serviço de garantia apenas para peças

A garantia limitada da HP pode incluir um serviço de garantia apenas para peças. Segundo os termos do serviço de garantia apenas para peças, a HP fornece as peças de reposição sem cobrar nenhuma taxa.

No caso desse serviço, a substituição de peças CSR é obrigatória. Se desejar que a HP substitua essas peças, serão cobradas as despesas de transporte e mão-de-obra do serviço.

顧客自己修理保証サービス

修理時間を短縮し、故障部品の交換における高い柔軟性を確保するために、HP製品には多数の顧客自己修理（CSR）部品があります。診断の際に、CSR部品を使用すれば修理ができるとHP（HPまたはHP正規保守代理店）が判断した場合、HPはその部品を直接、お客様に発送し、お客様に交換していただきます。CSR部品には以下の2通りがあります。

- 必須 - 顧客自己修理が必須の部品。当該部品について、もしもお客様がHPに交換作業を依頼される場合には、その修理サービスに関する交通費および人件費がお客様に請求されます。
- 任意 - 顧客自己修理が任意である部品。この部品も顧客自己修理用です。当該部品について、もしもお客様がHPに交換作業を依頼される場合には、お買い上げの製品に適用される保証サービス内容の範囲内においては、別途費用を負担していただくことなく保証サービスを受けることができます。

注： HP製品の一部の部品は、顧客自己修理用ではありません。製品の保証を継続するためには、HPまたはHP正規保守代理店による交換作業が必須となります。部品カタログには、当該部品が顧客自己修理除外品である旨が記載されています。

部品供給が可能な場合、地域によっては、CSR部品を翌営業日に届くように発送します。また、地域によっては、追加費用を負担いただくことにより同日または4時間以内に届くように発送することも可能な場合があります。サポートが必要なときは、HPの修理受付窓口に電話していただければ、技術者が電話でアドバイスします。交換用のCSR部品または同梱物には、故障部品をHPに返送する必要があるかどうかが表示されています。故障部品をHPに返送する必要がある場合は、指定期限内（通常は5営業日以内）に故障部品をHPに返送してください。故障部品を返送する場合は、届いた時の梱包箱に関連書類とともに入れてください。故障部品を返送しない場合、HPから部品費用が請求されます。顧客自己修理の際には、HPは送料および部品返送費を全額負担し、使用する宅配便会社や運送会社を指定します。

部品のみ保証サービス

HP保証サービスには、部品のみ保証サービスが適用される場合があります。このサービスでは、交換部品は無償で提供されます。

部品のみ保証サービスにおいては、CSR部品をお客様により交換作業していただくことが必須となります。当該部品について、もしもお客様がHPに交換作業を依頼される場合には、その修理サービスに関する交通費および人件費はお客様の負担となります。

客户自行维修

HP 产品提供许多客户自行维修 (CSR) 部件，以尽可能缩短维修时间和在更换缺陷部件方面提供更大的灵活性。如果在诊断期间 HP（或 HP 服务提供商或服务合作伙伴）确定可以通过使用 CSR 部件完成维修，HP 将直接把该部件发送给您进行更换。有两类 CSR 部件：

- **强制性的** — 要求客户必须自行维修的部件。如果您请求 HP 更换这些部件，则必须为该服务支付差旅费和人工费用。
- **可选的** — 客户可以选择是否自行维修的部件。这些部件也是为客户自行维修设计的。不过，如果您要求 HP 为您更换这些部件，则根据为您的产品指定的保修服务类型，HP 可能收取或不再收取任何附加费用。

注：某些 HP 部件的设计并未考虑客户自行维修。为了满足客户保修的需要，HP 要求授权服务提供商更换相关部件。这些部件在部件图解目录中标记为“否”。

CSR 部件将在下一个工作日发运（取决于备货情况和允许的地理范围）。在允许的地理范围内，可在当天或四小时内发运，但要收取额外费用。如果需要帮助，您可以致电 HP 技术支持中心，将会有技术人员通过电话为您提供帮助。HP 会在随更换的 CSR 部件发运的材料中指明是否必须将有缺陷的部件返还给 HP。如果要求您将有缺陷的部件返还给 HP，那么您必须在规定期限内（通常是五 (5) 个工作日）将缺陷部件发给 HP。有缺陷的部件必须随所提供的发运材料中的相关文件一起返还。如果未能送还有缺陷的部件，HP 可能会要求您支付更换费用。客户自行维修时，HP 将承担所有相关运输和部件返回费用，并指定快递商/承运商。

有关 HP 客户自行维修计划的详细信息，请与您当地的服务提供商联系。有关北美地区的计划，请访问 HP 网站 (http://www.hp.com/go/selfrepair)。

仅部件保修服务

您的 HP 有限保修服务可能涉及仅部件保修服务。根据仅部件保修服务条款的规定，HP 将免费提供更换的部件。

仅部件保修服务要求进行 CSR 部件更换。如果您请求 HP 更换这些部件，则必须为该服务支付差旅费和人工费用。

客戶自行維修

HP 產品設計了許多「客戶自行維修」(CSR) 的零件以減少維修時間，並且使得更換瑕疵零件時能有更大的彈性。如果在診斷期間 HP（或 HP 服務供應商或維修夥伴）辨認出此項維修工作可以藉由使用 CSR 零件來完成，則 HP 將直接寄送該零件給您作更換。CSR 零件分為兩種類別：

- **強制的** — 客戶自行維修所使用的零件是強制性的。如果您要求 HP 更換這些零件，HP 將會向您收取此服務所需的外出費用與勞動成本。
- **選購的** — 客戶自行維修所使用的零件是選購的。這些零件也設計用於客戶自行維修之用。不過，如果您要求 HP 為您更換，則可能需要也可能不需要負擔額外的費用，端視針對此產品指定的保固服務類型而定。

備註：某些 HP 零件沒有消費者可自行維修的設計。為符合客戶保固，HP 需要授權的服務供應商更換零件。這些零件在圖示的零件目錄中，被標示為「否」。

基於材料取得及環境允許的情況下，CSR 零件將於下一個工作日以快遞寄送。在環境的允許下當天或四小時內送達，則可能需要額外的費用。若您需要協助，可致電「HP 技術支援中心」，會有一位技術人員透過電話來協助您。不論損壞的零件是否必須退回，HP 皆會在與 CSR 替換零件一起運送的材料中註明。若要將損壞的零件退回 HP，您必須在指定的一段時間內（通常為五 (5) 個工作天），將損壞的零件寄回 HP。損壞的零件必須與寄送資料中隨附的相關技術文件一併退還。如果無法退還損壞的零件，HP 可能要向您收取替換費用。針對客戶自行維修情形，HP 將負責所有運費及零件退還費用並指定使用何家快遞/貨運公司。

如需 HP 的「客戶自行維修」方案詳細資訊，請連絡您當地的服務供應商。至於北美方案，請參閱 HP 網站 (http://www.hp.com/go/selfrepair)。

僅限零件的保固服務

您的「HP 有限保固」可能包含僅限零件的保固服務。在僅限零件的保固服務情況下，HP 將免費提供替換零件。

針對僅限零件的保固服務，CSR 零件替換是強制性的。如果您要求 HP 更換這些零件，HP 將會向您收取此服務所需的外出費用與勞動成本。

고객 셀프 수리

HP 제품은 수리 시간을 최소화하고 결함이 있는 부품 교체 시 더욱 융통성을 발휘할 수 있도록 하기 위해 고객 셀프 수리(CSR) 부품을 다량 사용하여 설계되었습니다. 진단 기간 동안 HP(또는 HP 서비스 공급업체 또는 서비스 협력업체)에서 CSR 부품을 사용하여 수리가 가능하다고 판단되면 HP는 해당 부품을 바로 사용자에게 보내어 사용자가 교체할 수 있도록 합니다. CSR 부품에는 두 가지 종류가 있습니다.

- **고객 셀프 수리가 의무 사항인 필수 부품.** 사용자가 HP에 이 부품의 교체를 요청할 경우 이 서비스에 대한 출장비 및 작업비가 청구됩니다.
- **고객 셀프 수리가 선택 사항인 부품.** 이 부품들도 고객 셀프 수리가 가능하도록 설계되었습니다. 하지만 사용자가 HP에 이 부품의 교체를 요청할 경우 사용자가 구입한 제품에 해당하는 보증 서비스 유형에 따라 추가 비용 없이 교체가 가능할 수 있습니다.

참고: 일부 HP 부품은 고객 셀프 수리가 불가능하도록 설계되었습니다. HP는 만족스러운 고객 보증을 위해 공인 서비스 제공업체를 통해 부품을 교체하도록 하고 있습니다. 이러한 부품들은 Illustrated Parts Catalog에 "No"라고 표시되어 있습니다.

CSR 부품은 재고 상태와 지리적 조건이 허용하는 경우 다음 영업일 납품이 가능하도록 배송이 이루어집니다. 지리적 조건이 허용하는 경우 추가 비용이 청구되는 조건으로 당일 또는 4시간 배송이 가능할 수도 있습니다. 도움이 필요하시면 HP 기술 지원 센터로 전화하십시오. 전문 기술자가 전화로 도움을 줄 것입니다. HP는 결함이 발생한 부품을 HP로 반환해야 하는지 여부를 CSR 교체 부품과 함께 배송된 자료에 지정합니다. 결함이 발생한 부품을 HP로 반환해야 하는 경우에는 지정된 기간 내(통상 영업일 기준 5일)에 HP로 반환해야 합니다. 이 때 결함이 발생한 부품은 제공된 포장 재료에 넣어 관련 설명서와 함께 반환해야 합니다. 결함이 발생한 부품을 반환하지 않는 경우 HP가 교체 부품에 대해 비용을 청구할 수 있습니다. 고객 셀프 수리의 경우, HP는 모든 운송 및 부품 반환 비용을 부담하며 이용할 운송업체 및 택배 서비스를 결정합니다.

HP 고객 셀프 수리 프로그램에 대한 자세한 내용은 가까운 서비스 제공업체에 문의하십시오. 북미 지역의 프로그램에 대해서는 HP 웹 사이트(http://www.hp.com/go/selfrepair)를 참조하십시오.

부품 제공 보증 서비스

HP 제한 보증에는 부품 제공 보증 서비스가 포함될 수 있습니다. 이러한 경우 HP는 부품 제공 보증 서비스의 조건에 따라 교체 부품만을 무료로 제공합니다.

부품 제공 보증 서비스 제공 시 CSR 부품 교체는 의무 사항입니다. 사용자가 HP에 이 부품의 교체를 요청할 경우 이 서비스에 대한 출장비 및 작업비가 청구됩니다.

2 Illustrated parts catalog

This chapter provides the illustrated parts breakdown and spare parts lists for the HP ProLiant ML150 Generation 5 server. Information for contacting HP is also provided.

Mechanical Components

Figure 2-1 Mechanical components

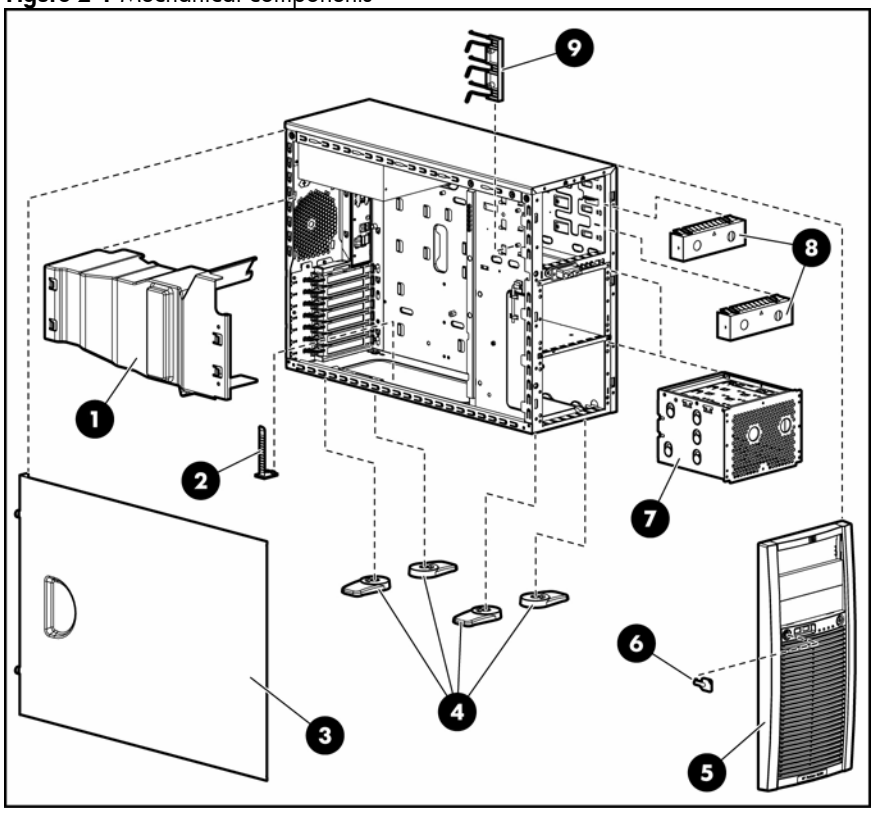

Table 2-1 Mechanical components spare parts list

Item	Description	Spare part number	Customer self repair
	Mechanical parts kit (partial listing)	462513-001	Mandatory[1]
1	Fan (air) baffle		
2	Cable clamp	460569-001	Mandatory[1]
4	Foot stand (4)		
3	Access panel (side)	460024-001	Mandatory[1]
5	Front bezel	460568-001	Mandatory[1]
6	Front bezel key	459183-001	Mandatory[1]
7	Non-hot-plug hard disk drive (HDD) cage	464188-001	Mandatory[1]
8	EMI shield (2)	460566-001	Mandatory[1]
9	Optical disk drive retainer	460567-001	Mandatory[1]

[1]Mandatory—Parts for which customer self repair is mandatory. If you request HP to replace these parts, you will be charged for the travel and labor costs of this service.

[2]Optional—Parts for which customer self repair is optional. These parts are also designed for customer self repair. If, however, you require that HP replace them for you, there may or may not be additional charges, depending on the type of warranty service designated for your product.

[3]No—Some HP parts are not designed for customer self repair. In order to satisfy the customer warranty, HP requires that an authorized service provider replace the part. These parts are identified as "No" in the Illustrated Parts Catalog.

[1]Mandatory: Obligatoire—Pièces pour lesquelles la réparation par le client est obligatoire. Si vous demandez à HP de remplacer ces pièces, les coûts de déplacement et main d'œuvre du service vous seront facturés.

[2]Optional: Facultatif—Pièces pour lesquelles la réparation par le client est facultative. Ces pièces sont également conçues pour permettre au client d'effectuer lui-même la réparation. Toutefois, si vous demandez à HP de remplacer ces pièces, l'intervention peut ou non vous être facturée, selon le type de garantie applicable à votre produit.

[3]No: Non—Certaines pièces HP ne sont pas conçues pour permettre au client d'effectuer lui-même la réparation. Pour que la garantie puisse s'appliquer, HP exige que le remplacement de la pièce soit effectué par un Mainteneur Agréé. Ces pièces sont identifiées par la mention “Non” dans le Catalogue illustré.

[1]Mandatory: Obbligatorie—Parti che devono essere necessariamente riparate dal cliente. Se il cliente ne affida la riparazione ad HP, deve sostenere le spese di spedizione e di manodopera per il servizio.

[2]Optional: Opzionali—Parti la cui riparazione da parte del cliente è facoltativa. Si tratta comunque di componenti progettati per questo scopo. Se tuttavia il cliente ne richiede la sostituzione ad HP, potrebbe dover sostenere spese addizionali a seconda del tipo di garanzia previsto per il prodotto.

[3]No: Non CSR—Alcuni componenti HP non sono progettati per la riparazione da parte del cliente. Per rispettare la garanzia, HP richiede che queste parti siano sostituite da un centro di assistenza autorizzato. Tali parti sono identificate da un “No” nel Catalogo illustrato dei componenti.

[1]Mandatory: Zwingend—Teile, die im Rahmen des Customer Self Repair Programms ersetzt werden müssen. Wenn Sie diese Teile von HP ersetzen lassen, werden Ihnen die Versand- und Arbeitskosten für diesen Service berechnet.

[2]Optional: Optional—Teile, für die das Customer Self Repair-Verfahren optional ist. Diese Teile sind auch für Customer Self Repair ausgelegt. Wenn Sie jedoch den Austausch dieser Teile von HP vornehmen lassen möchten, können bei diesem Service je nach den für Ihr Produkt vorgesehenen Garantiebedingungen zusätzliche Kosten anfallen.

[3]No: Kein—Einige Teile sind nicht für Customer Self Repair ausgelegt. Um den Garantieanspruch des Kunden zu erfüllen, muss das Teil von einem HP Servicepartner ersetzt werden. Im illustrierten Teilekatalog sind diese Teile mit „No“ bzw. „Nein“ gekennzeichnet.

[1]Mandatory: Obligatorio—componentes para los que la reparación por parte del usuario es obligatoria. Si solicita a HP que realice la sustitución de estos componentes, tendrá que hacerse cargo de los gastos de desplazamiento y de mano de obra de dicho servicio.

[2]Optional: Opcional— componentes para los que la reparación por parte del usuario es opcional. Estos componentes también están diseñados para que puedan ser reparados por el usuario. Sin embargo, si precisa que HP realice su sustitución, puede o no conllevar costes adicionales, dependiendo del tipo de servicio de garantía correspondiente al producto.

[3]No: No—Algunos componentes no están diseñados para que puedan ser reparados por el usuario. Para que el usuario haga valer su garantía, HP pone como condición que un proveedor de servicios autorizado realice la sustitución de estos componentes. Dichos componentes se identifican con la palabra “No” en el catálogo ilustrado de componentes.

[1]Mandatory: Verplicht—Onderdelen waarvoor Customer Self Repair verplicht is. Als u HP verzoekt deze onderdelen te vervangen, komen de reiskosten en het arbeidsloon voor uw rekening.

[2]Optional: Optioneel—Onderdelen waarvoor reparatie door de klant optioneel is. Ook deze onderdelen zijn ontworpen voor reparatie door de klant. Als u echter HP verzoekt deze onderdelen voor u te vervangen, kunnen daarvoor extra kosten in rekening worden gebracht, afhankelijk van het type garantieservice voor het product.

[3]No: Nee—Sommige HP onderdelen zijn niet ontwikkeld voor reparatie door de klant. In verband met de garantievoorwaarden moet het onderdeel door een geautoriseerde Service Partner worden vervangen. Deze onderdelen worden in de geïllustreerde onderdelencatalogus aangemerkt met "Nee".

[1]Mandatory: Obrigatória—Peças cujo reparo feito pelo cliente é obrigatório. Se desejar que a HP substitua essas peças, serão cobradas as despesas de transporte e mão-de-obra do serviço.

[2]Optional: Opcional—Peças cujo reparo feito pelo cliente é opcional. Essas peças também são projetadas para o reparo feito pelo cliente. No entanto, se desejar que a HP as substitua, pode haver ou não a cobrança de taxa adicional, dependendo do tipo de serviço de garantia destinado ao produto.

[3]No: Nenhuma—Algumas peças da HP não são projetadas para o reparo feito pelo cliente. A fim de cumprir a garantia do cliente, a HP exige que um técnico autorizado substitua a peça. Essas peças estão identificadas com a marca “No” (Não), no catálogo de peças ilustrado.

[1]Mandatory：必須 - 顧客自己修理が必須の部品。当該部品について、もしもお客様がHPに交換作業を依頼される場合には、その修理サービスに関する交通費および人件費がお客様に請求されます。

[2]Optional：任意 - 顧客自己修理が任意である部品。この部品も顧客自己修理用です。当該部品について、もしもお客様がHPに交換作業を依頼される場合には、お買い上げの製品に適用される保証サービス内容の範囲内においては、費用を負担していただくことなく保証サービスを受けることができます。

[3]No：除外 - HP製品の一部の部品は、顧客自己修理用ではありません。製品の保証を継続するためには、HPまたはHP正規保守代理店による交換作業が必須となります。部品カタログには、当該部品が顧客自己修理除外品である旨が記載されています。

[1]Mandatory: 强制性的 — 要求客户必须自行维修的部件。如果您请求 HP 更换这些部件，则必须为该服务支付差旅费和人工费用。

[2]Optional: 可选的 — 客户可以选择是否自行维修的部件。这些部件也是为客户自行维修设计的。不过，如果您要求 HP 为您更换这些部件，则根据为您的产品指定的保修服务类型，HP 可能收取或不再收取任何附加费用。

[3]No: 否 — 某些 HP 部件的设计并未考虑客户自行维修。为了满足客户保修的需要，HP 要求授权服务提供商更换相关部件。这些部件在部件图解目录中标记为“否”。

[1]Mandatory: 強制的 — 客戶自行維修所使用的零件是強制性的。如果您要求 HP 更換這些零件，HP 將會向您收取此服務所需的外出費用與勞動成本。

[2]Optional: 選購的 — 客戶自行維修所使用的零件是選購的。這些零件也設計用於客戶自行維修之用。不過，如果您要求 HP 為您更換，則可能需要也可能不需要負擔額外的費用，端視針對此產品指定的保固服務類型而定。

[3]No: 否 — 某些 HP 零件沒有消費者可自行維修的設計。為符合客戶保固，HP 需要授權的服務供應商更換零件。這些零件在圖示的零件目錄中，被標示為「否」。

[1] Mandatory: 필수 — 고객 셀프 수리가 의무 사항인 필수 부품. 사용자가 HP에 이 부품의 교체를 요청할 경우 이 서비스에 대한 출장비 및 작업비가 청구됩니다.

[2] Optional: 옵션 — 고객 셀프 수리가 선택 사항인 부품. 이 부품들도 고객 셀프 수리가 가능하도록 설계되었습니다. 하지만 사용자가 HP에 이 부품의 교체를 요청할 경우 사용자가 구입한 제품에 해당하는 보증 서비스 유형에 따라 추가 비용 없이 교체가 가능할 수 있습니다.

[3] No: No — 고객 셀프 수리가 불가능하도록 설계된 HP 부품. 이 부품들은 고객 셀프 수리가 불가능하도록 설계되었습니다. HP는 고객 보증을 만족시키기 위해 공인 서비스 제공업체를 통해 부품을 교체하도록 하고 있습니다.

Electrical components

Figure 2-2 Electrical components

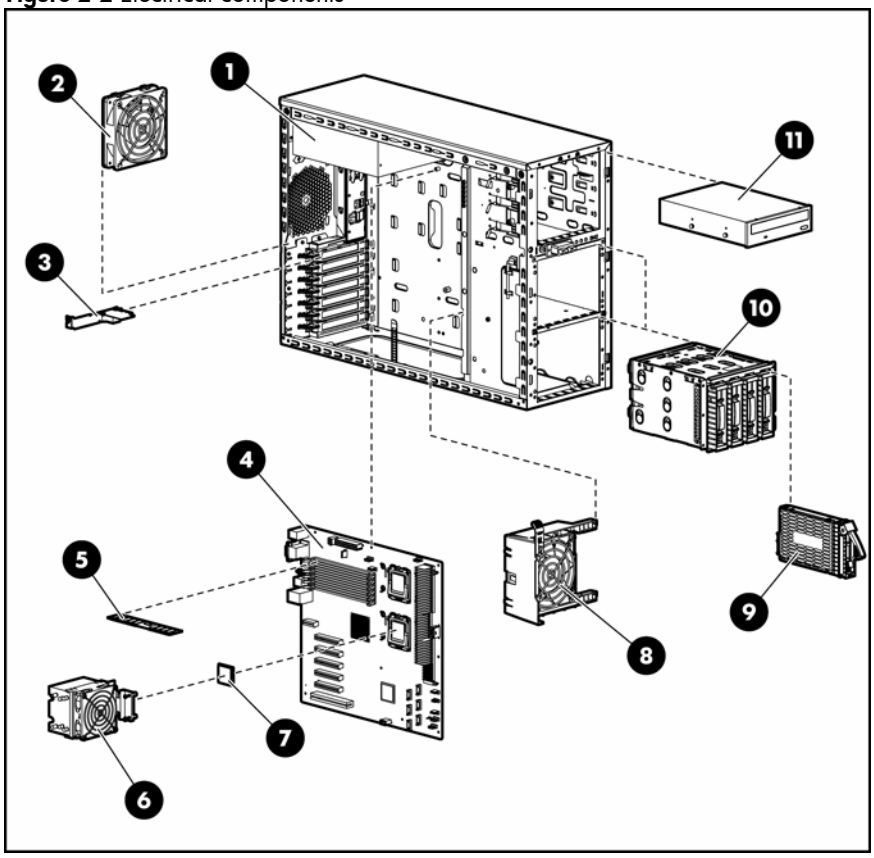

Table 2-2 Electrical components spare parts list

Item	Description	Spare part number	Customer self repair
1	650-watt power supply unit	461512-001	Mandatory[1]
	PS,GNRC,1U,750W,12V,REDUNDANT,HTPLG	454353-001	Optional
	RPS 5U Backplane with Cage, 750W	462676-001	Optional
2	Rear fan assembly:		
	Fan bracket, rear	460421-001	Mandatory[1]
	Fan	459188-001	Mandatory[1]
3	IPMI card (HP Lights-Out 100c)	457885-001	Mandatory[1]
4	System board (PCA)	461511-001	Optional[2]
*	SATA/SAS card	405132-B21	Mandatory[1]
5	512-MB PC2-5300 registered DIMM	416355-001	Mandatory[1]
	1-GB PC2-5300 registered DIMM	416356-001	Mandatory[1]
	2-GB PC2-5300 registered DIMM	430451-001	Mandatory[1]
6	Heatsink assembly	460501-001	Optional[2]

Table 2-2 Electrical components spare parts list

Item	Description	Spare part number	Customer self repair
7	Intel® Xeon® Quad-Core E5440 Processor 2.83 GHz/1333 MHz FCPGA	462782-001	Optional[2]
	Intel Xeon Quad-Core E5430 Processor 2.66 GHz/1333 MHz FCPGA	462781-001	Optional[2]
	Intel Xeon Quad-Core E5420 Processor 2.5 GHz/1333 MHz FCPGA	462780-001	Optional[2]
	Intel Xeon Quad-Core E5410 Processor 2.33 GHz/1333 MHz FCPGA	462779-001	Optional[2]
	Intel Xeon Quad-Core E5405 Processor 2.0 GHz/1333 MHz FCPGA	462778-001	Optional[2]
	Intel Xeon Dual-Core E5205 Processor 1.8 GHz/1066 MHz FCPGA	460493-001	Optional[2]
8	Front fan/PCI card holder assembly	461773-001	Mandatory[1]
9	160-GB Hot-pluggable SATA hard drive	353043-001	Mandatory[1]
*	160-GB Non-hot-pluggable SATA hard drive	373312-001	Mandatory[1]
10	Hot-pluggable HDD cage assembly:		
	HDD cage	464188-001	Mandatory[1]
	HDD cage backplane (PCA)	464187-001	Mandatory[1]
*	Hot-pluggable hard drive blank	413960-001	Mandatory[1]
11	DVD-ROM SATA drive	447464-001	Mandatory[1]

*Not shown

[1]Mandatory—Parts for which customer self repair is mandatory. If you request HP to replace these parts, you will be charged for the travel and labor costs of this service.

[2]Optional—Parts for which customer self repair is optional. These parts are also designed for customer self repair. If, however, you require that HP replace them for you, there may or may not be additional charges, depending on the type of warranty service designated for your product.

[3]No—Some HP parts are not designed for customer self repair. In order to satisfy the customer warranty, HP requires that an authorized service provider replace the part. These parts are identified as "No" in the Illustrated Parts Catalog.

[1]Mandatory: Obligatoire—Pièces pour lesquelles la réparation par le client est obligatoire. Si vous demandez à HP de remplacer ces pièces, les coûts de déplacement et main d'œuvre du service vous seront facturés.

[2]Optional: Facultatif—Pièces pour lesquelles la réparation par le client est facultative. Ces pièces sont également conçues pour permettre au client d'effectuer lui-même la réparation. Toutefois, si vous demandez à HP de remplacer ces pièces, l'intervention peut ou non vous être facturée, selon le type de garantie applicable à votre produit.

[3]No: Non—Certaines pièces HP ne sont pas conçues pour permettre au client d'effectuer lui-même la réparation. Pour que la garantie puisse s'appliquer, HP exige que le remplacement de la pièce soit effectué par un Mainteneur Agréé. Ces pièces sont identifiées par la mention “Non” dans le Catalogue illustré.

[1]Mandatory: Obbligatorie—Parti che devono essere necessariamente riparate dal cliente. Se il cliente ne affida la riparazione ad HP, deve sostenere le spese di spedizione e di manodopera per il servizio.

[2]Optional: Opzionali—Parti la cui riparazione da parte del cliente è facoltativa. Si tratta comunque di componenti progettati per questo scopo. Se tuttavia il cliente ne richiede la sostituzione ad HP, potrebbe dover sostenere spese addizionali a seconda del tipo di garanzia previsto per il prodotto.

[3]No: Non CSR—Alcuni componenti HP non sono progettati per la riparazione da parte del cliente. Per rispettare la garanzia, HP richiede che queste parti siano sostituite da un centro di assistenza autorizzato. Tali parti sono identificate da un "No" nel Catalogo illustrato dei componenti.

[1]Mandatory: Zwingend—Teile, die im Rahmen des Customer Self Repair Programms ersetzt werden müssen. Wenn Sie diese Teile von HP ersetzen lassen, werden Ihnen die Versand- und Arbeitskosten für diesen Service berechnet.

[2]Optional: Optional—Teile, für die das Customer Self Repair-Verfahren optional ist. Diese Teile sind auch für Customer Self Repair ausgelegt. Wenn Sie jedoch den Austausch dieser Teile von HP vornehmen lassen möchten, können bei diesem Service je nach den für Ihr Produkt vorgesehenen Garantiebedingungen zusätzliche Kosten anfallen.

[3]No: Kein—Einige Teile sind nicht für Customer Self Repair ausgelegt. Um den Garantieanspruch des Kunden zu erfüllen, muss das Teil von einem HP Servicepartner ersetzt werden. Im illustrierten Teilekatalog sind diese Teile mit „No" bzw. „Nein" gekennzeichnet.

[1]Mandatory: Obligatorio—componentes para los que la reparación por parte del usuario es obligatoria. Si solicita a HP que realice la sustitución de estos componentes, tendrá que hacerse cargo de los gastos de desplazamiento y de mano de obra de dicho servicio.

[2]Optional: Opcional— componentes para los que la reparación por parte del usuario es opcional. Estos componentes también están diseñados para que puedan ser reparados por el usuario. Sin embargo, si precisa que HP realice su sustitución, puede o no conllevar costes adicionales, dependiendo del tipo de servicio de garantía correspondiente al producto.

[3]No: No—Algunos componentes no están diseñados para que puedan ser reparados por el usuario. Para que el usuario haga valer su garantía, HP pone como condición que un proveedor de servicios autorizado realice la sustitución de estos componentes. Dichos componentes se identifican con la palabra "No" en el catálogo ilustrado de componentes.

[1]Mandatory: Verplicht—Onderdelen waarvoor Customer Self Repair verplicht is. Als u HP verzoekt deze onderdelen te vervangen, komen de reiskosten en het arbeidsloon voor uw rekening.

[2]Optional: Optioneel—Onderdelen waarvoor reparatie door de klant optioneel is. Ook deze onderdelen zijn ontworpen voor reparatie door de klant. Als u echter HP verzoekt deze onderdelen voor u te vervangen, kunnen daarvoor extra kosten in rekening worden gebracht, afhankelijk van het type garantieservice voor het product.

[3]No: Nee—Sommige HP onderdelen zijn niet ontwikkeld voor reparatie door de klant. In verband met de garantievoorwaarden moet het onderdeel door een geautoriseerde Service Partner worden vervangen. Deze onderdelen worden in de geïllustreerde onderdelencatalogus aangemerkt met "Nee".

[1]Mandatory: Obrigatória—Peças cujo reparo feito pelo cliente é obrigatório. Se desejar que a HP substitua essas peças, serão cobradas as despesas de transporte e mão-de-obra do serviço.

[2]Optional: Opcional—Peças cujo reparo feito pelo cliente é opcional. Essas peças também são projetadas para o reparo feito pelo cliente. No entanto, se desejar que a HP as substitua, pode haver ou não a cobrança de taxa adicional, dependendo do tipo de serviço de garantia destinado ao produto.

[3]No: Nenhuma—Algumas peças da HP não são projetadas para o reparo feito pelo cliente. A fim de cumprir a garantia do cliente, a HP exige que um técnico autorizado substitua a peça. Essas peças estão identificadas com a marca "No" (Não), no catálogo de peças ilustrado.

[1]Mandatory：必須 - 顧客自己修理が必須の部品。当該部品について、もしもお客様がHPに交換作業を依頼される場合には、その修理サービスに関する交通費および人件費がお客様に請求されます。

[2]Optional：任意 - 顧客自己修理が任意である部品。この部品も顧客自己修理用です。当該部品について、もしもお客様がHPに交換作業を依頼される場合には、お買い上げの製品に適用される保証サービス内容の範囲内においては、費用を負担していただくことなく保証サービスを受けることができます。

[3]No：除外 - HP製品の一部の部品は、顧客自己修理用ではありません。製品の保証を継続するためには、HPまたはHP正規保守代理店による交換作業が必須となります。部品カタログには、当該部品が顧客自己修理除外品である旨が記載されています。

[1]Mandatory: 强制性的 — 要求客户必须自行维修的部件。如果您请求 HP 更换这些部件，则必须为该服务支付差旅费和人工费用。

[2]Optional: 可选的 — 客户可以选择是否自行维修的部件。这些部件也是为客户自行维修设计的。不过，如果您要求 HP 为您更换这些部件，则根据为您的产品指定的保修服务类型，HP 可能收取或不再收取任何附加费用。

[3]No: 否 — 某些 HP 部件的设计并未考虑客户自行维修。为了满足客户保修的需要，HP 要求授权服务提供商更换相关部件。这些部件在部件图解目录中标记为“否”。

[1]Mandatory: 強制的 — 客戶自行維修所使用的零件是強制性的。如果您要求 HP 更換這些零件，HP 將會向您收取此服務所需的外出費用與勞動成本。

[2]Optional: 選購的 — 客戶自行維修所使用的零件是選購的。這些零件也設計用於客戶自行維修之用。不過，如果您要求 HP 為您更換，則可能需要也可能不需要負擔額外的費用，端視針對此產品指定的保固服務類型而定。

[3]No: 否 — 某些 HP 零件沒有消費者可自行維修的設計。為符合客戶保固，HP 需要授權的服務供應商更換零件。這些零件在圖示的零件目錄中，被標示為「否」。

[1] Mandatory: 필수 — 고객 셀프 수리가 의무 사항인 필수 부품. 사용자가 HP에 이 부품의 교체를 요청할 경우 이 서비스에 대한 출장비 및 작업비가 청구됩니다.

[2] Optional: 옵션 — 고객 셀프 수리가 선택 사항인 부품. 이 부품들도 고객 셀프 수리가 가능하도록 설계되었습니다. 하지만 사용자가 HP에 이 부품의 교체를 요청할 경우 사용자가 구입한 제품에 해당하는 보증 서비스 유형에 따라 추가 비용 없이 교체가 가능할 수 있습니다.

[3] No: No — 고객 셀프 수리가 불가능하도록 설계된 HP 부품. 이 부품들은 고객 셀프 수리가 불가능하도록 설계되었습니다. HP는 고객 보증을 만족시키기 위해 공인 서비스 제공업체를 통해 부품을 교체하도록 하고 있습니다.

HP contact information

For the name of the nearest HP authorized reseller:

- In the United States, call 1-800-345-1518.
- In Canada, call 1-800-263-5868.
- In other locations, refer to the HP website at **http://www.hp.com/**.

For HP technical support:

- In North America:
  - Call 1-800-HP-INVENT (1-800-474-6836). This service is available 24 hours a day, 7 days a week. For continuous quality improvement, calls may be recorded or monitored.
  - If you have purchased a Care Pack (service upgrade), call 1-800-633-3600. For more information about Care Packs, refer to the HP website at **http://www.hp.com/**.
- Outside North America, call the nearest HP Technical Support Phone Center. For telephone numbers for worldwide Technical Support Centers, refer to the HP website at **http://www.hp.com/**.

Before you contact HP

Be sure to have the following information available before you call HP:

- Technical support registration number (if applicable)
- Product serial number
- Product model name and number
- Applicable error messages
- Add-on boards or hardware
- Third-party hardware or software
- Operating system type and revision level

3 Removal and replacement procedures

This chapter provides subassembly/module-level removal and replacement procedures for the HP ProLiant ML150 Generation 5 server.

Before installing a new component, review its specifications to ensure compatibility with the server. When integrating a new component into the system, record all pertinent component information, including model and serial number, for future reference. After completing any removal or replacement procedure, run the diagnostics program to verify that all components operate properly.

Required tools

You need the following tools to perform these procedures:

- T-15 Torx screwdriver
- Flat-blade screwdriver

NOTE: The figures used in this chapter to illustrate procedural steps are labeled numerically (i.e., 1, 2…). When these figures are used in substep items, the alphabetically labeled instructions correspond to the numbered labels on the related figure (i.e., Label 1 corresponds to step a, label 2 corresponds to step b, etc.).

Hardware configuration information

⚠ **WARNING:** Only authorized technicians trained by HP should attempt to repair this equipment. Because of the complexity of the individual boards and subassemblies, no one should attempt to make repairs at the component level or to make modifications to any printed wiring board. Improper repairs can create a safety hazard.

△ **CAUTION:** Electrostatic discharge (ESD) can damage electronic components. Be sure that you are properly grounded (earthed) before beginning any installation procedure. Refer to the "Electrostatic Discharge Information" section for more information.

Before removing any serviceable parts, determine whether the part is a hot-plug or non-hot-plug type.

Non-hot-plug devices

Non-hot-pluggable devices require that the server be powered down before removal or installation. Non-hot-plug devices in the server include the processor, all boards, memory modules, fans, PCI and IPMI option cards, and non-hot-pluggable hard drives.

Electrostatic discharge information

ESD can damage static-sensitive devices or micro circuitry. Proper packaging and grounding techniques are necessary precautions to prevent damage. To prevent electrostatic damage, observe the following precautions:

- Transport products in static-safe containers such as conductive tubes, bags, or boxes.
- Keep electrostatic-sensitive parts in their containers until they arrive at static-free stations.
- Cover workstations with approved static-dissipating material. Use a wrist strap connected to the work surface and properly grounded (earthed) tools and equipment.
- Keep work area free of nonconductive materials, such as ordinary plastic assembly aids and foam packing.
- Make sure that you are always properly grounded (earthed) when touching a static-sensitive component or assembly.
- Avoid touching pins, leads, or circuitry.
- Always place drives with the Printed Circuit Board (PCB) assembly-side down.
- Use conductive field service tools.

Symbols on equipment

These symbols may be found on equipment to indicate areas where hazardous conditions may exist.

WARNING! This symbol, in conjunction with any of the following symbols, indicates the presence of a potential hazard. The potential for injury exists if warnings are not observed. Consult your documentation for specific details.

This symbol indicates the presence of hazardous energy circuits or electric shock hazards. Refer all servicing to qualified personnel.

WARNING! To reduce the risk of injury from electric shock hazards, do not open this enclosure. Refer all maintenance, upgrades, and servicing to qualified personnel.

This symbol indicates the presence of electric shock hazards. The area contains no user or field serviceable parts. Do not open for any reason.

WARNING! To reduce the risk of injury from electric shock hazards, do not open this enclosure.

This symbol on an RJ-45 receptacle indicates a network interface connection.

WARNING! To reduce the risk of electric shock, fire, or damage to the equipment, do not plug telephone or telecommunications connectors into this receptacle.

This symbol indicates the presence of a hot surface or hot component. If this surface is contacted, the potential for injury exists.

WARNING! To reduce the risk of injury from a hot component, allow the surface to cool before touching.

These symbols, on power supplies or systems, indicate that the equipment is supplied by multiple sources of power.

WARNING! To reduce the risk of injury from electric shock, remove all power cords to completely disconnect power from the system.

Weight in kg
Weight in lbs

This symbol indicates that the component exceeds the recommended weight for one individual to handle safely.

WARNING! To reduce the risk of personal injury or damage to the equipment, observe local occupational health and safety requirements and guidelines for manual material handling.

Pre-installation instructions

Perform the steps below before you open the server or before you remove or replace any component:

1. Turn off the server and all the peripherals connected to it.
2. Refer to the Powering down the server section in this chapter for detailed instructions on how to completely power down the server.
3. Unplug all cables from power outlets to avoid exposure to high energy levels that may cause burns if parts are short-circuited by metal objects such as tools or jewelry. If necessary, label each cable for reassembly.
4. Disconnect telecommunication cables to avoid exposure to shock hazard from ringing voltages.
5. Open the server according to the instructions described in the System covers section in this chapter.
6. Follow the ESD precautions listed previously in this chapter when handling a server component.

WARNING: Failure to properly turn off the server before you open it or before you start installing/removing components may cause serious damage as well as bodily harm.

Post-installation instructions

Observe the following items after installing or removing a server component:

1. Make sure that you install all components according to the described step-by-step instructions.
2. Make sure not to leave loose tools or parts inside the server.
3. Reinstall any expansion board(s), peripheral(s), board cover(s), and system cable(s) that have previously been removed.
4. Reinstall the system covers.
5. Connect all external cables and the AC power cord to the system.
6. Press the power button on the front panel to turn on the server.

CAUTION: Do not operate the server for more than 10 minutes with the access panel and drives removed. Otherwise, improper cooling airflow may damage system components.

Powering down the server

To power down the server:

1. Shut down server as directed by the operating system documentation.
2. If necessary, press and hold the power button until the server shuts off.
3. Disconnect the AC power cord(s) from the AC outlet(s) and then disconnect the cord(s) from the server.
4. Be sure that the power LED indicator is turned off and that the fan noise has stopped.
5. Disconnect all external peripheral devices from the server.

WARNING: To completely remove all power from the system, disconnect all power cords from server.

WARNING: Hazardous voltages are present inside the server. Always disconnect AC power from the server and other associated assemblies while working inside the unit. Serious injury may result if this warning is not observed.

WARNING: To reduce the risk of injury from electric shock, disconnect all power cords to completely remove power from the system.

WARNING: To reduce the risk of personal injury from hot surfaces, allow the internal system components to cool before touching them.

CAUTION: Protect the server from power fluctuations and temporary interruptions with a regulating uninterruptible power supply (UPS). This device protects the hardware from damage caused by power surges and voltage spikes, and keeps the system in operation during a power failure.

CAUTION: The server must always be operated with the system covers on. Proper cooling is not achieved when the system covers are removed.

System covers

The access panel and the front bezel are both detachable. Both system covers must be removed and detached before removing or replacing non-hot-plug components. Servers configured with hot-plug drives require only the front bezel to be removed to remove and replace hot-plug drives.

Access panel

To remove the access panel:

1. If necessary, unlock the unit using the supplied key.
2. Loosen the captive thumbscrews located on the rear edge of the access panel.
3. Slide the panel back about 1.3 cm (0.5 in).

NOTE: The access panel does not need to be removed for removal and replacement of hot-plug drives.

Figure 3-1 Removing the access panel

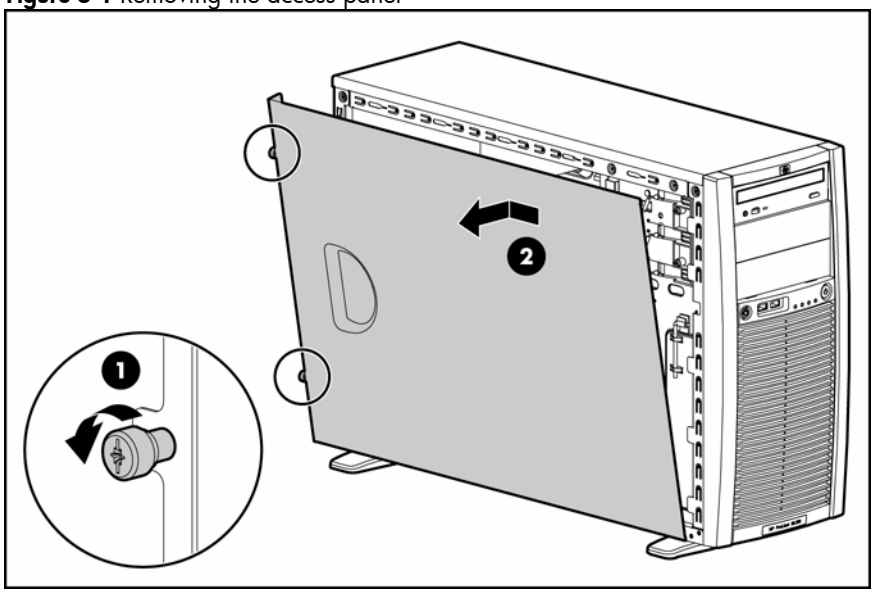

To reinstall the access panel:

1. Use both hands to place the access panel flat against the chassis, the back of the access panel extending about 1.3 cm (0.5 inch) behind the back of the server. Make sure the stand-off on the access panel align with the holes on the edges of the chassis.
2. Slide the panel toward the front of the chassis to position it into place.
3. Tighten the captive thumbscrews to secure the panel.

Figure 3-2 Reinstalling the access panel

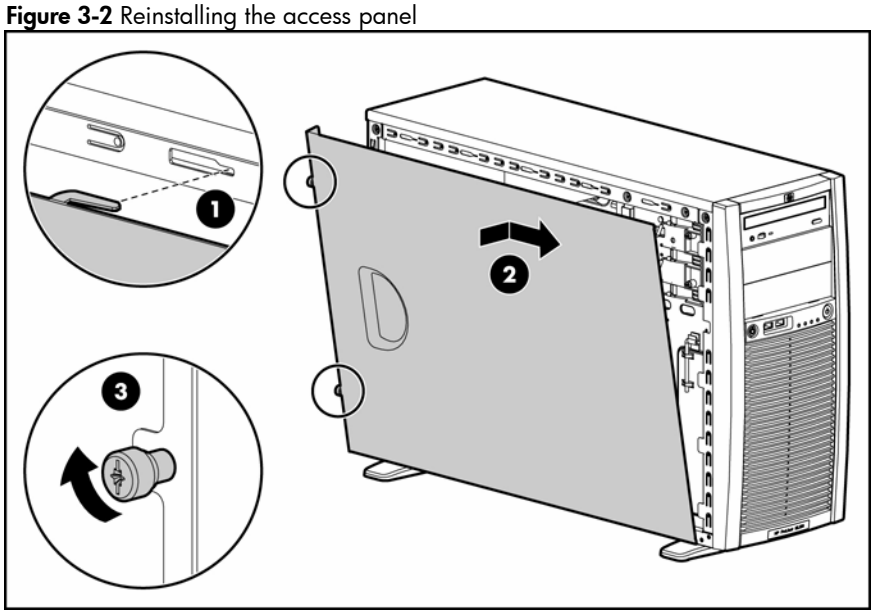

End of procedure.

Front bezel

To open or remove the front bezel:

1. If necessary, unlock the front bezel door using the supplied key.
2. Open the bezel door to the right and lift up to remove it.

Figure 3-3 Opening the front bezel

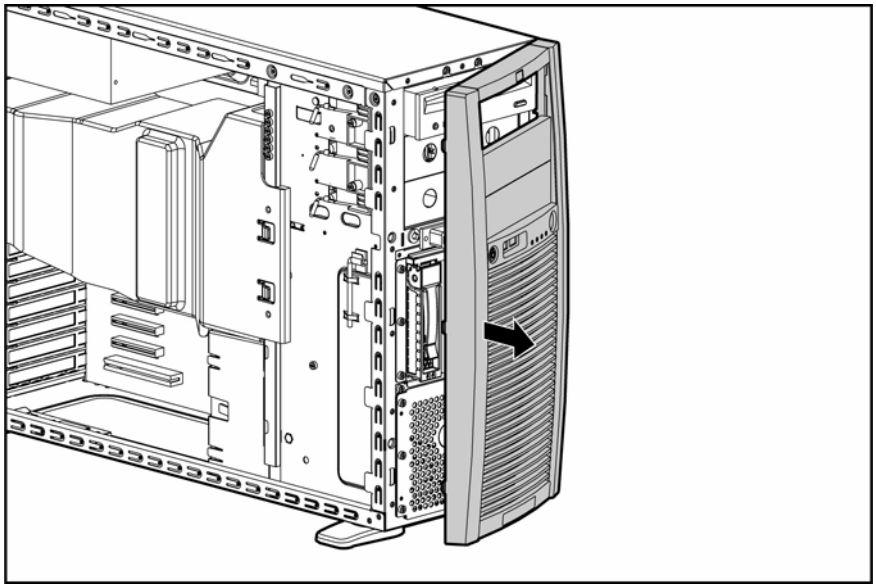

To re-attach and close the front bezel:

1. Insert the three hooks on the right side of the bezel into the rectangular holes on the chassis.
2. Rotate the bezel to the left so that the three tabs on the left side of the bezel snap into the slots on the chassis.

Figure 3-4 Closing the front bezel

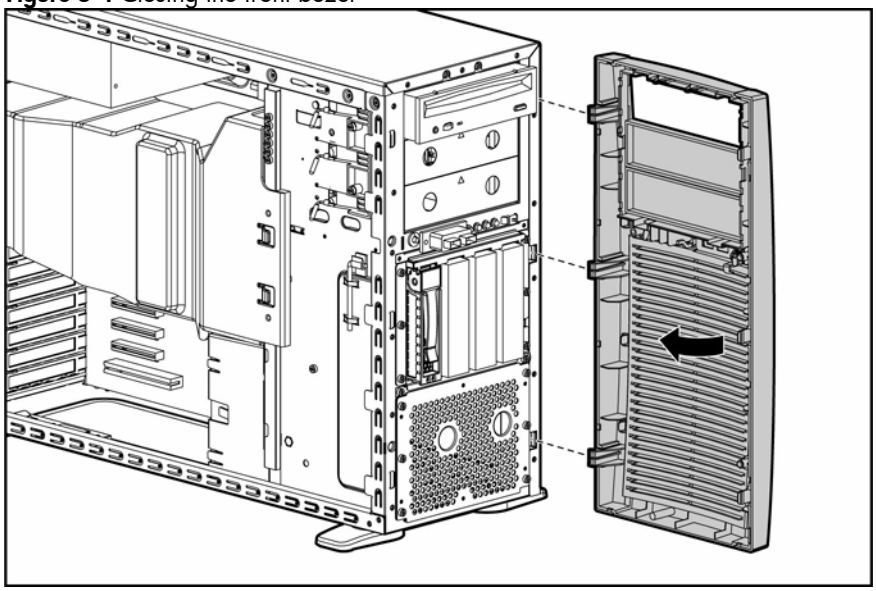

End of procedure.

Cable management

Cabling guidelines

- Keep cables away from major heat sources like the heat sink assembly.
- Do not jam cables on top of expansion cards or memory modules. Printed circuit cards are not designed to withstand excessive pressure.
- Keep cables clear of sliding or moveable parts to prevent cutting or crimping.
- When folding a flat ribbon cable, never fold to a sharp crease. Sharp creases may damage the wires.
- Some flat ribbon cables come pre-folded. Never change the folds on these cables.
- Do not sharply bend any cable. A sharp bend can break the internal wires.
- Never bend an SATA data cable tighter than a 30 mm (1.18 in) radius.
- Never crease an SATA data cable.
- Do not rely on components like the drive cage, power supply, or computer cover to push cables down into the chassis.
- Use supplied cable management straps to secure cables.

NOTE: Always follow good cable management practices when working inside the computer.

To remove power supply power cables P1, P2, P3, and RPS from system board connectors J23, J38, J13, and J26 respectively use the following steps:

1. Squeeze on the top of the retaining latch attached to the cable end of the connector.
2. Grasp the cable end of the connector and pull it straight up.

CAUTION: When removing cables, always pull the connector - NEVER pull on the cable. Pulling the cable could cause cable damage and result in power supply failure.

Figure 3-5 Unplugging power cables from the system board

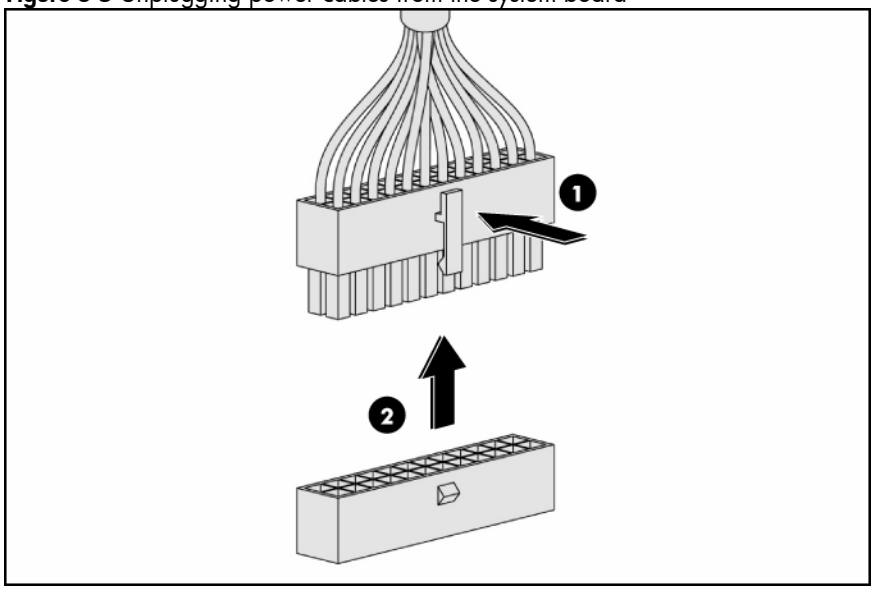

Cable connections

Table 3-1 provides cabling information for the server chassis. For more detailed information about system board components, see System board components in Chapter 5.

Table 3-1 Cable connection

From	To	# of pins
Power supply, P1	System board, J23	24
Power supply, P2	System board, J38	8
Power supply, P3	System board, J13	4
Power supply, RPS	System board, J26	12
Power supply, P3-5, 8, 9, 14, 15	ATX drives and/or hot-plug HDD backplane	4
Power supply, P6, 7, 10-13, 16, 17	SATA drives	5
Processor 0 fan	System board, J28	4
Processor 1 fan	System board, J27	4
Rear chassis fan	System board, J4	4
Front USB 2.0 ports	System board, J36	10
Front fan	System board, J35	4
System board SATA1 (SATA0)	SATA hard drive #1 [1]	7
System board SATA2 (SATA1)	SATA hard drive #2 [1]	7
System board SATA3 (SATA2)	SATA hard drive #3 [1]	7
System board SATA4 (SATA3)	SATA hard drive #4 [1]	7
System board SATA5 (SATA4)	SATA optical drive #2	7
System board SATA6 (SATA5)	SATA optical drive #1	7

NOTE:
[1] For systems with hot-pluggable hard disk drives, hard drives #1-4 are terminated into one connector that attaches to the HDD card cage backplane.

Mass storage devices (drives)

The server supports a maximum of eleven mass storage devices. The top-most drive bay (bay 11) is populated with an optical drive in the standard configuration. The next lower drive bay (bay 10) can accommodate an additional optical drive, and bay 9 can accommodate a tape drive. The upper hard drive area supports a non-hot-plug or hot-plug hard disk drive (HDD) cage providing bays 1 through 4.

Servers shipped with a hot-plug HDD cage in the upper drive bay area can support an additional hot-plug HDD cage in the lower drive bay area providing bays 5 through 8. Servers shipped with a non-hot-plug HDD cage in the upper bay area can be upgraded to a hot-plug HDD system by replacing the non-hot-plug HDD cage with an optional hot-plug HDD cage. The server supports SATA or SAS drives.

NOTE: An SATA or SAS hard drive can be installed into the second half-height optical bay.

Figure 3-6 Drive bay configuration (hot-plug system shown)

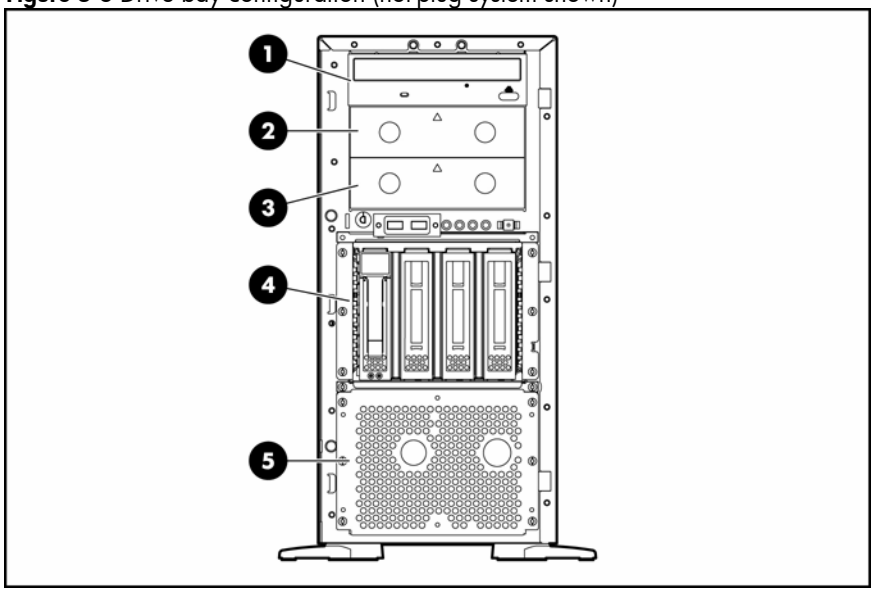

Item	Description
1	1st optical drive (bay 11)
2	2nd optical drive (bay 10)
3	Tape drive or 3rd optical drive bay (bay 9)
4	Upper hard drive area, bays 1 (left) thru 4 (right))
5	Lower hard drive area, bays 5 (left) thru-8 (right)

Optical and tape drives

Installing an optical or tape drive

NOTE: The following procedure shows the installation of an optical drive in bay 10. The procedure for installing a tape drive in bay 9 is virtually the same.

To add an optical drive to the server:

1. Power down the server.
2. Disconnect the power cord(s).
3. Remove the access panel and front bezel as described in the section titled "System covers."
4. Remove the EMI shield from the drive bay by placing the thumb and forefinger into the large holes of the shield and pulling the shield straight out of the chassis.

Figure 3-7 Removing the EMI shield

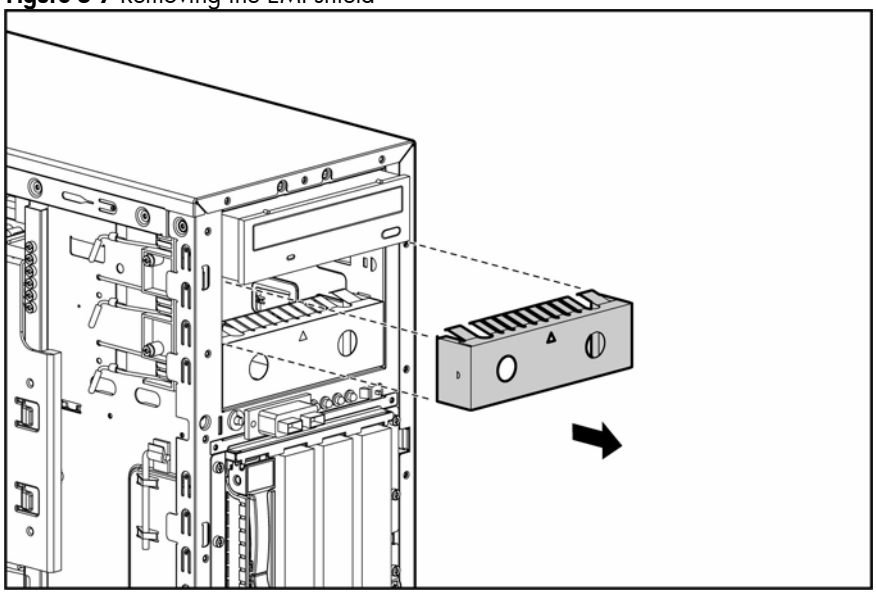

CAUTION: Do not discard the EMI shield. If the drive is removed in the future, the shield must be re-installed to maintain proper EMI shielding.

5. Remove the new drive from the protective packaging.

6. Release the drive latch lever (Figure 3-8, 1).
7. Slide the new drive into the bay until it stops (2), then close the drive latch lever (3).

Figure 3-8 Installing an optical drive

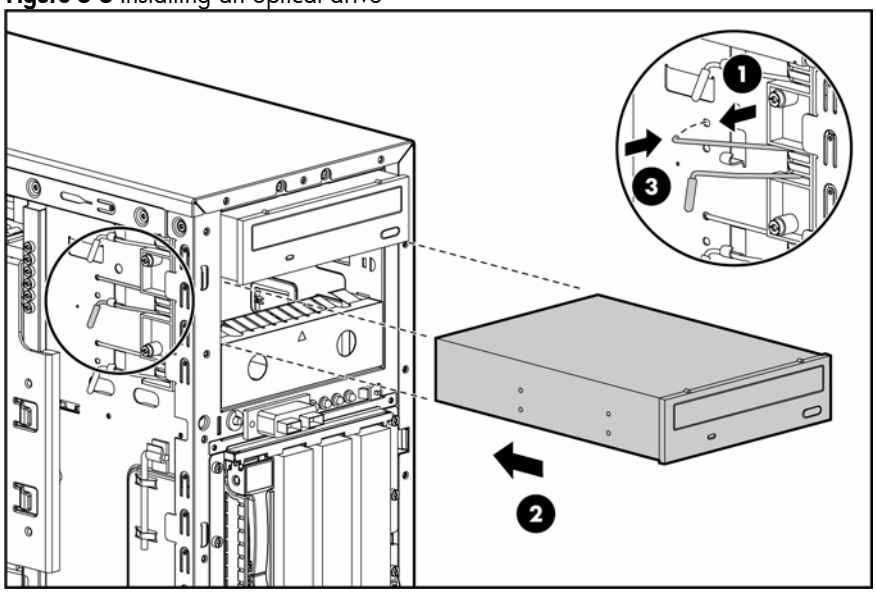

8. Connect the power and data cables to the connectors on the rear of the new drive.
9. Replace the front bezel and access panel.
10. Reconnect the power cord(s)

End of procedure.

To remove an optical or tape drive, reverse the procedure above.

Hard drives

The server uses a HDD cage assembly that supports four hard drives in either a non-hot-plug or hot-plug configuration. The server supports SATA or SAS hard drives. SATA hard drives are supported directly by the system board. SAS hard drives require an SATA/SAS PCIe expansion card. For more information about installing PCIe expansion cards, see “Expansion cards.”

Non-hot-plug hard drives

Servers shipped in a non-hot-plug drive configuration include a non-hot-plug HDD cage installed in the upper bay area (bays 1 through 4).

Removing/replacing a non-hot-plug hard drive

To remove and replace a non-hot-plug hard drive:

1. Power down the server.
2. Disconnect the power cord(s).
3. Remove the access panel and front bezel as described in the section titled “System covers.”
4. Disconnect the power and data cables from all hard drives (Figure 3-9, 1).
5. Remove the six mounting screws from the HDD cage (2) and slide the HDD cage out from the server chassis (3).

Figure 3-9 Removing a non-hot-plug HDD cage

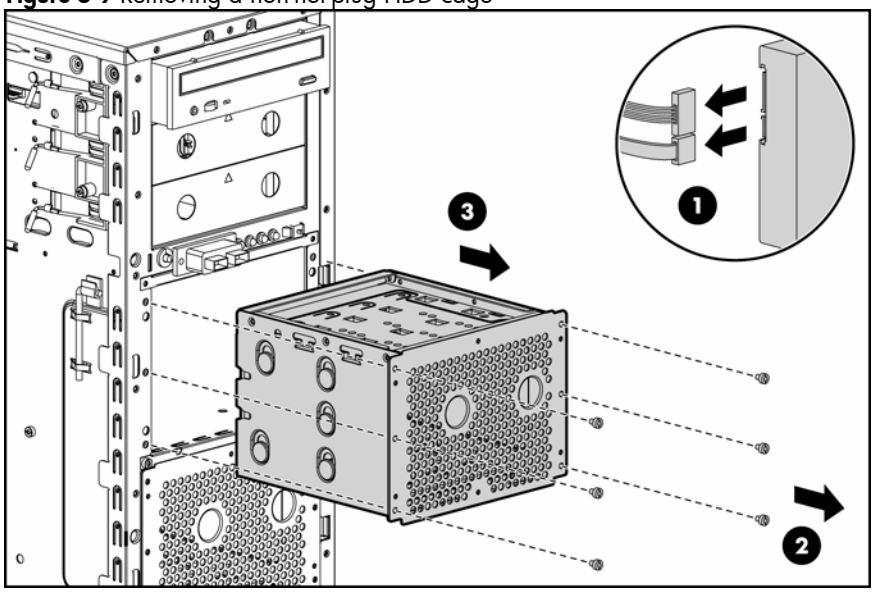

6. To remove a hard drive from the HDD cage:
   a. Remove the four retaining screws (two on the top, two on the bottom) holding the drive in place (Figure 3-10, 1).
   b. Slide the drive out from the HDD cage (2).

Figure 3-10 Removing a non-hot-plug hard drive

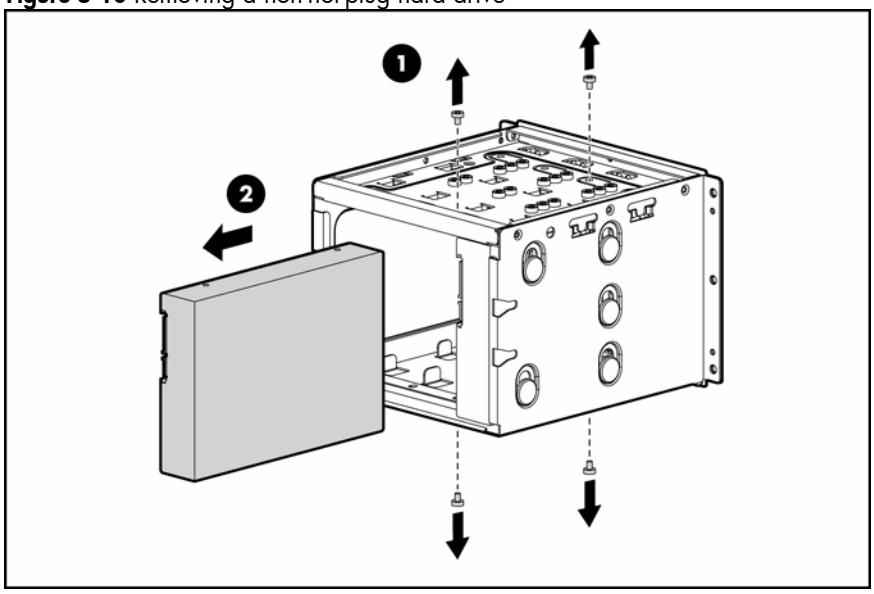

7. To replace a hard drive into the HDD cage:
   a. Slide the hard drive vertically into the HDD cage (1).
   b. Using the provided surplus screws if necessary (2), install four retaining screws (3).

Figure 3-11 Replacing a non-hot-plug hard drive

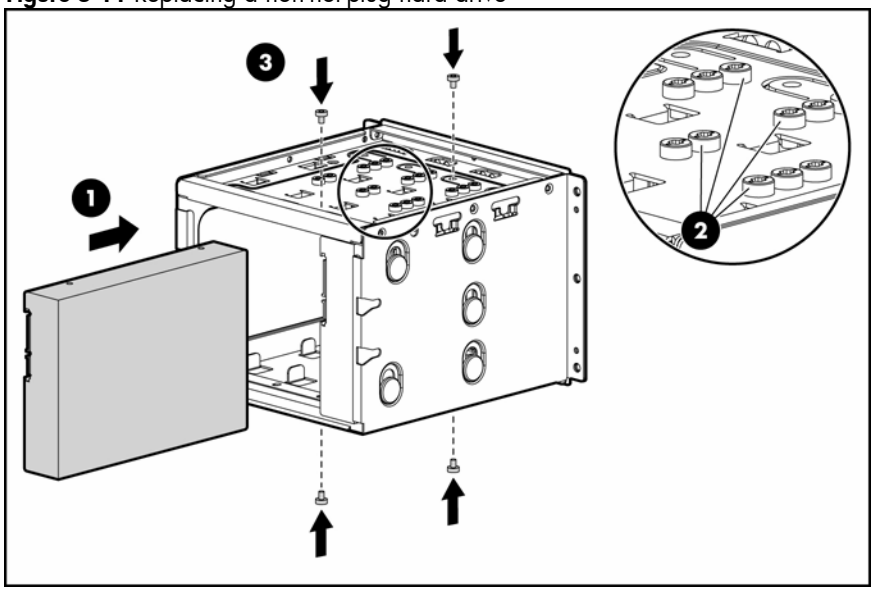

8. Re-install the non-hot-plug HDD cage into the server and re-install the six mounting screws.
9. Connect the power and data cables to all hard drives.
10. Replace the access panel and the front bezel.
11. Reconnect the power cord(s).

End of procedure. To remove a non-hot-plug drive, reverse the procedure above.

Hot-plug hard drives

Servers shipped in a hot-plug drive configuration include a hot-plug HDD cage installed in the upper bay area (bays 1 through 4). The hot-plug HDD cage includes a backplane that four hard drive carriers plug into.

Removing/replacing a hot-plug hard drive

NOTE: The server does not need to be powered down for this procedure.

To remove and replace a hot-plug hard drive:

1. Remove the front bezel as described in the section titled "System covers."
2. If adding a hot-plug drive, first remove the hot-plug drive blanking panel:
   a. Press the release latches toward each other (1).
   b. Pull the blanking panel out of the bay (2).

Figure 3-12 Removing a hot-plug drive blanking panel

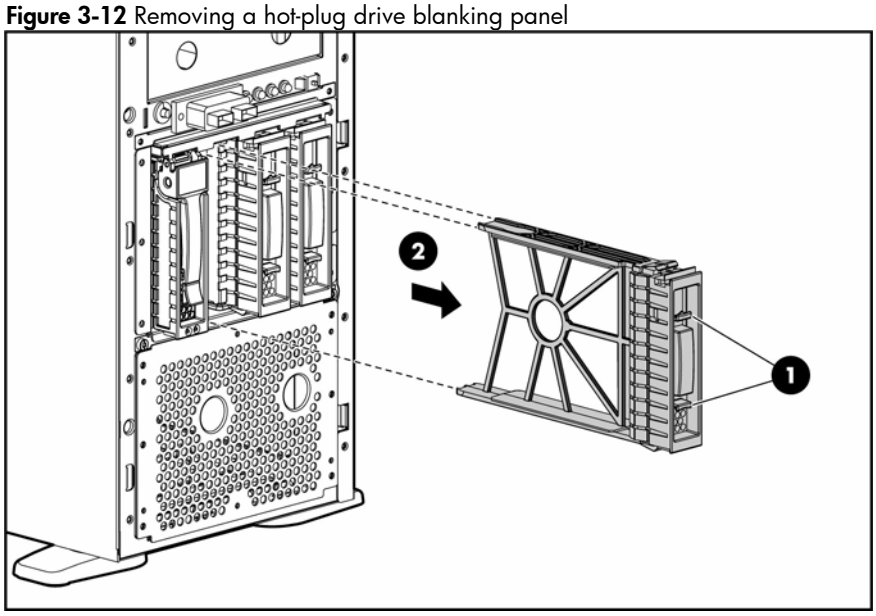

3. If replacing a hot-plug drive, remove the hot-plug drive to be replaced:
   a. Push in the thumb release of the desired hard drive carrier (1).
   b. Pull the cam latch upward (2).
   c. Gently pull the hard drive carrier straight out from the drive bay (3).

Figure 3-13 Removing a hot-plug hard drive

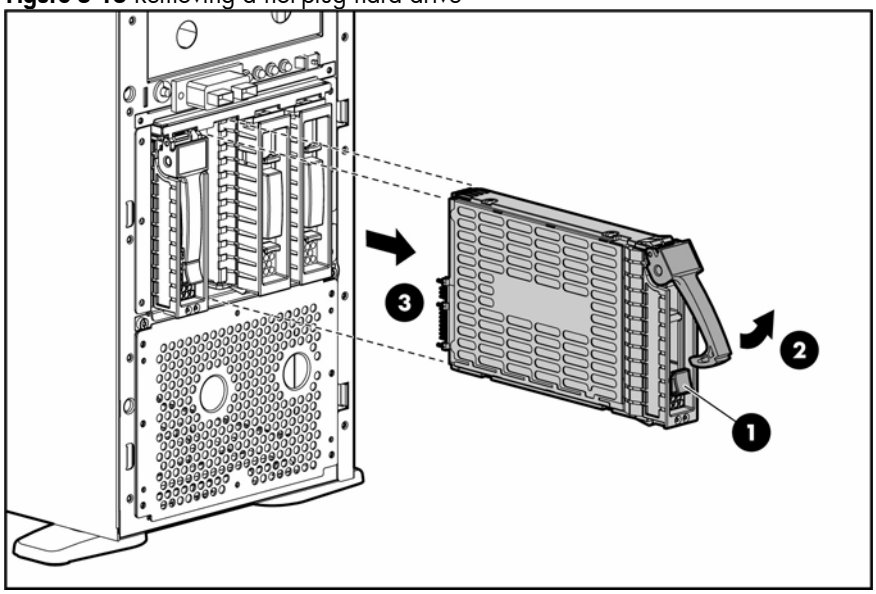

   d. Remove the two screws on each side of the carrier (1).
   e. Lift the hard drive out of the carrier (2).

Figure 3-14 Separating the hard drive from the carrier

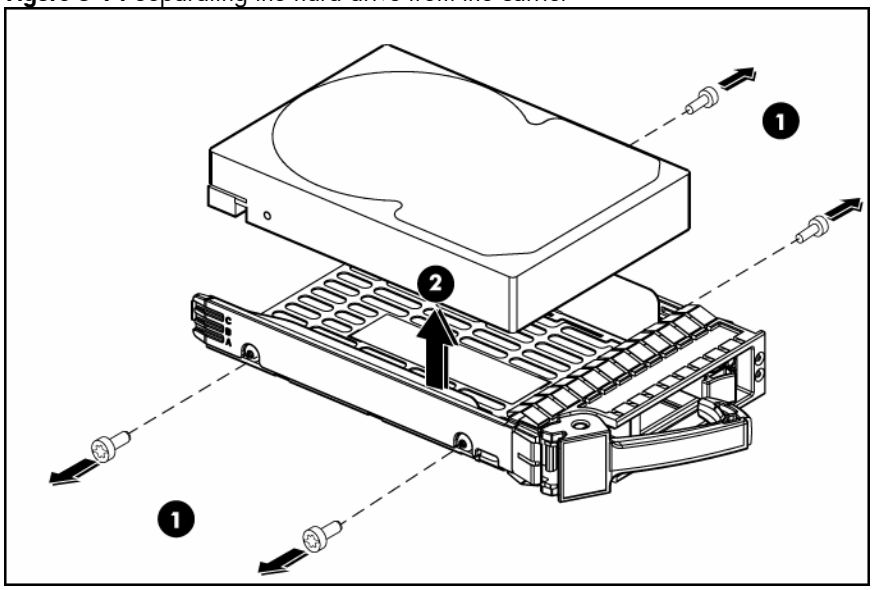

   f. Insert the replacement hard drive inside the carrier.
   g. Replace the two screws on each side of the carrier.

4. Slide the hard drive carrier into the drive bay until resistance is felt (1).
5. Verify that the hooks behind the pivot end of the cam latch will engage the hole in the edge of the hard drive cage.
6. Rotate the cam latch down to fully seat the drive carrier into the backplane and press in until it clicks into place (2).

Figure 3-15 Installing a hot-plug hard drive

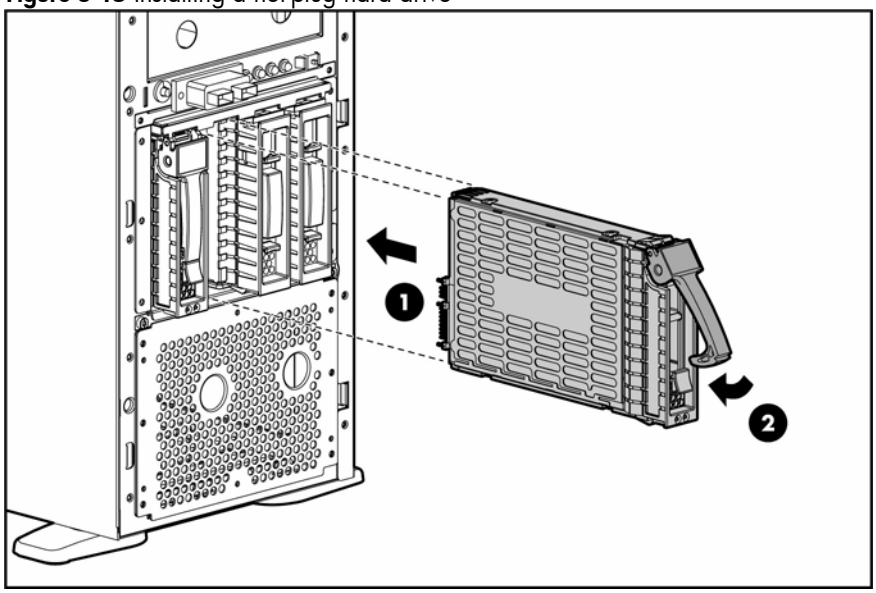

7. Replace and close the front bezel.

End of procedure.

HDD cage

The server can accommodate two types of cages: a non-hot-plug HDD cage (without a backplane) and a hot-plug HDD cage (with a backplane). In the standard configuration the server will have one of these types of HDD cages installed in the upper hard drive area.

Removing and replacing a non-hot-plug HDD cage

The removal and replacement of the non-hot-plug HDD cage is described in the Hard Drive subsection titled "Removing/replacing a non-hot-plug hard drive."

Removing and replacing a hot-plug HDD cage and backplane

To remove and replace the hot-plug HDD cage:

1. Power down the server.
2. Disconnect the power cord(s).
3. Remove the access panel and front bezel as described in the section titled "System covers."
4. Remove all hard drives from the HDD cage as described in the section titled "Removing/replacing a hot-plug hard drive."
5. Disconnect the power and data cables from the backplane of the HDD cage.

Figure 3-16 Disconnecting cables from the HDD cage backplane

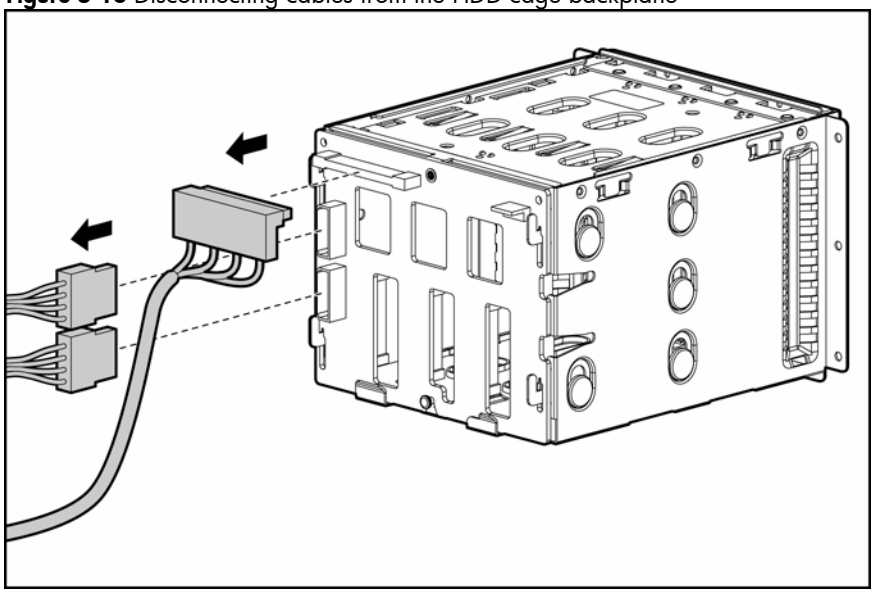

6. Remove the six mounting screws from the HDD cage (1) and slide the HDD cage out from the server chassis (2).

Figure 3-17 Removing a hot-plug HDD cage

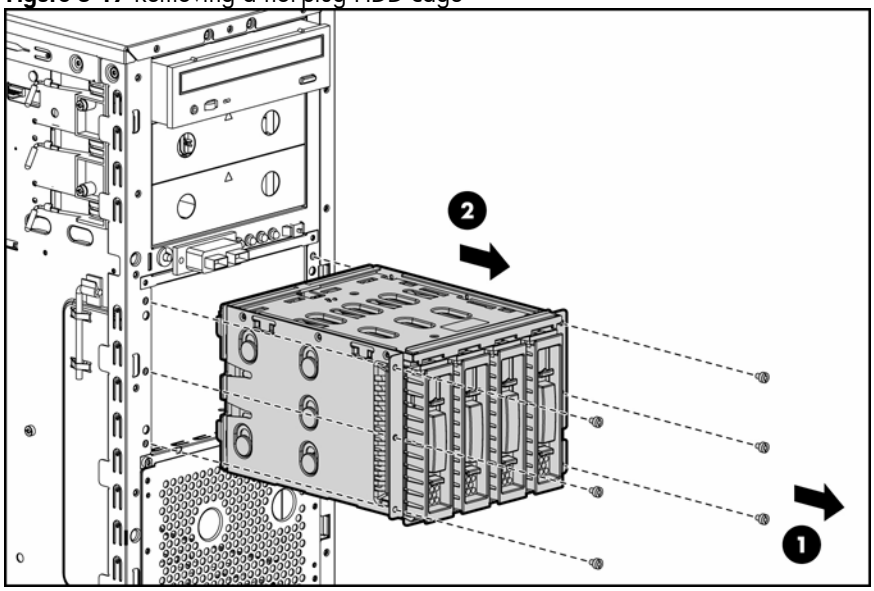

7. To remove and replace the backplane:
   a. Remove the single screw securing the backplane to the HDD cage (1).
   b. Slide the backplane up slightly to clear the four cage hooks and securing post and then lift the backplane away from the cage (2).

Figure 3-18 Removing the backplane from the HDD cage

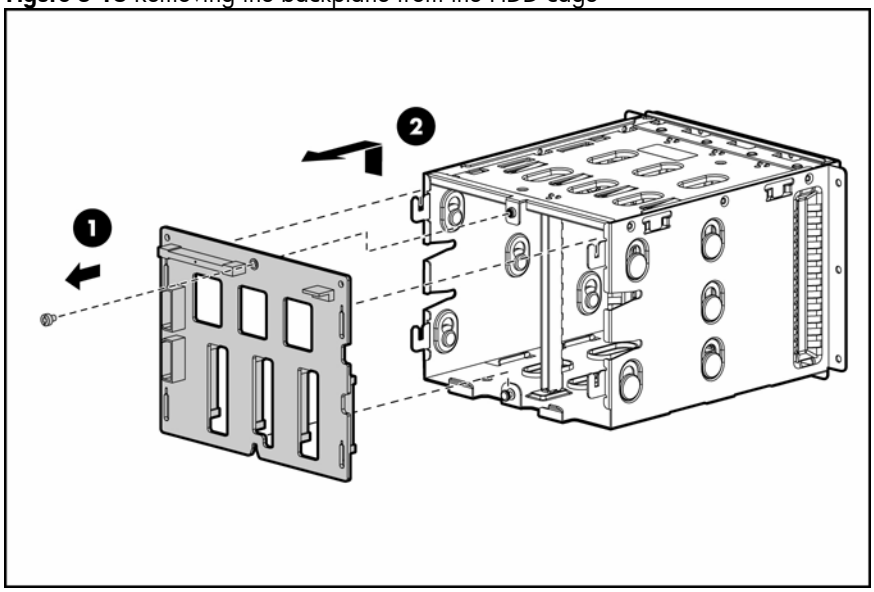

   c. To replace the backplane, reverse steps a and b.

End of procedure.

To replace the hot-plug HDD cage, reverse steps 1 through 6.

System board components (replaceable)

Refer to the following sections for instructions on removing or replacing the processor, the memory modules, the expansion cards, and the system battery.

Processor

The HP ProLiant ML150 Generation 5 Server supports single (1P)- and dual-processor (2P) operation. With two processors installed, the server supports boot functions through the processor installed in processor socket 0. However, if processor 0 fails, the system automatically boots from the processor installed in processor socket 1 and provides a processor failure message.

The two LGA771 processor sockets support the following processor types:

- Intel Xeon Dual Core 5100 and 5200 series processors
- Intel Xeon Quad Core 5300 and 5400 series processors

△ **CAUTION:** To prevent possible server malfunction in 2P systems, ensure that both processors are the same type (series).

Figure 3-19 LGA771 processor sockets

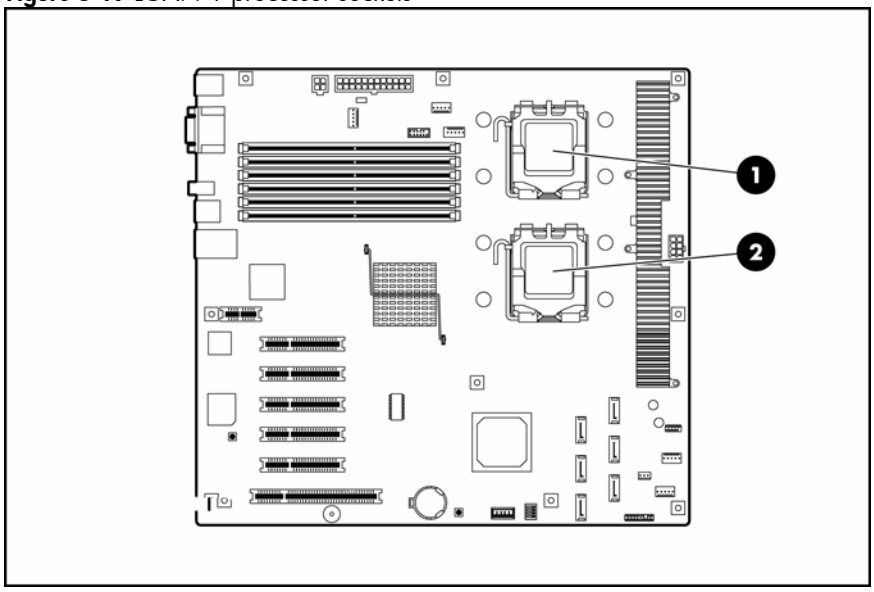

Item	Description
1	Processor 0 socket
2	Processor 1 socket

Removing a processor

To remove a processor, proceed as follows:

1. Power down the server.
2. Disconnect the power cord(s).
3. Unlock the server if necessary and remove the access panel (refer to section "System covers").
4. On the air baffle, pull the four tabs out slightly and lift the baffle away from the chassis.

Figure 3-20 Removing the air baffle

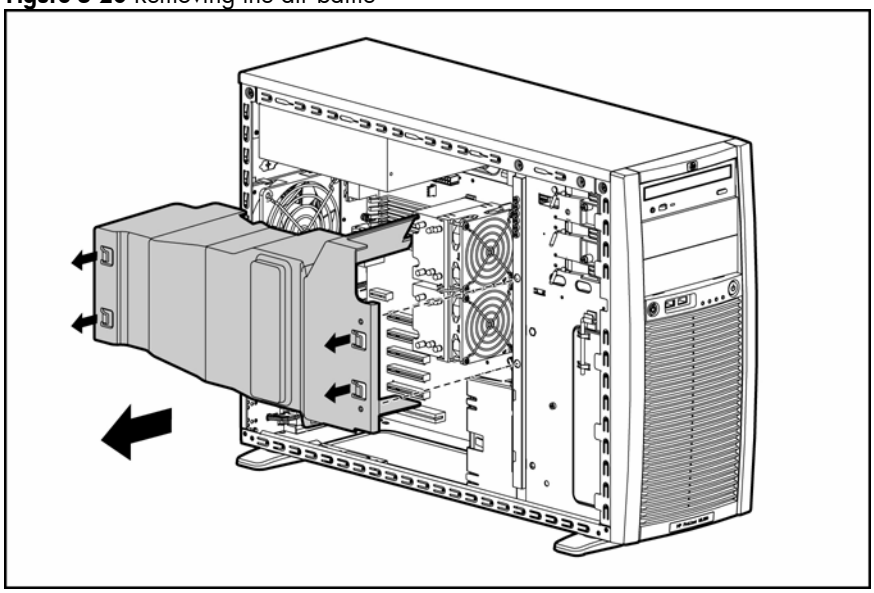

5. Place the server on its side with the open side up.
6. Disconnect the processor fan cable from system board connector J27 or J28 (Figure 3-21, 1).

Figure 3-21 Removing the heatsink

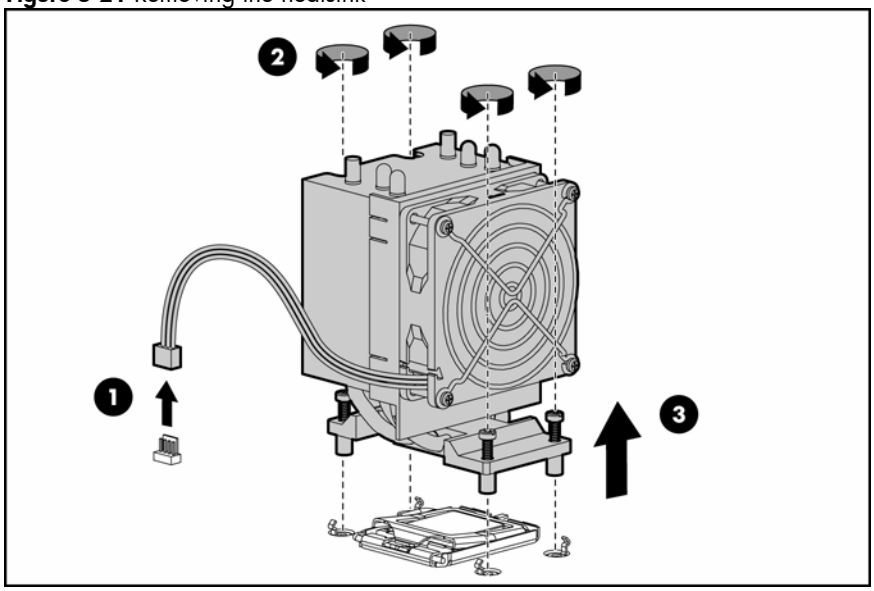

7. Loosen the heatsink mounting screws (2) and lift the heatsink away from the system board (3).

△ **CAUTION:** If the heatsink is to be reused, carefully place the heatsink in a position where the base (processor contact area) will not come in contact with foreign matter.

8. Disengage and lift the socket load lever (Figure 3-22, 1).
9. Lift the retention plate to expose the socket body (2).
10. Grasp the processor by its edges and lift it out of the socket (3).

Figure 3-22 Removing the processor

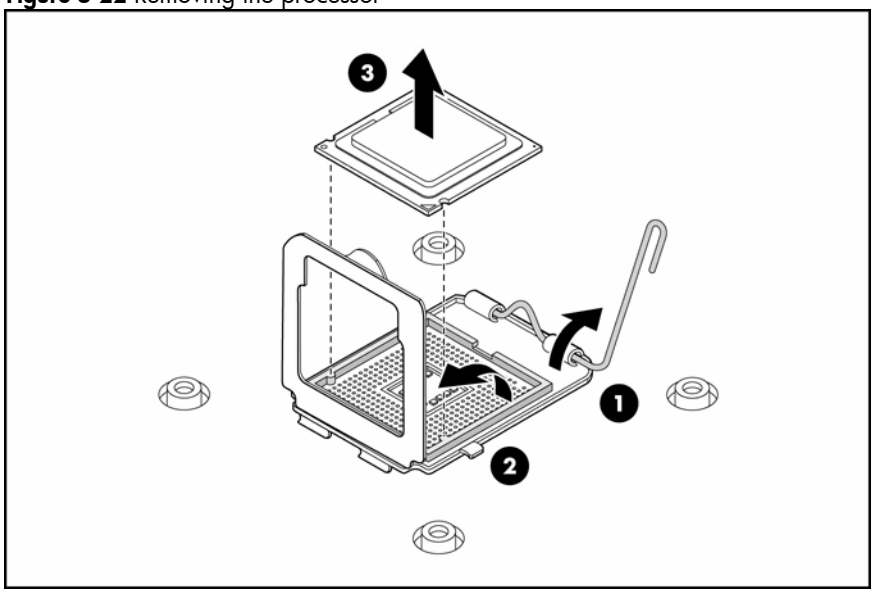

CAUTION: Place the processor on a static-dissipating work surface or in an anti-static bag.

Replacing the processor

CAUTION: To allow the heatsink to draw away as much heat as possible from the processor, there must be a tight connection between the heatsink base and the top of the processor. To ensure this connection, a thermal grease compound must be used.

To replace or install a processor:

1. Using a clean cloth dipped in rubbing alcohol, clean the surface of the heatsink base (contact area) and the top of new processor. Ensure that both surfaces are clean and that no particles or dust contaminants are evident.
2. Apply the thermal grease compound to the top of the processor (the contact surface).

CAUTION: HP recommends thermal grease of X-23-7783D made by Shin-Etsu.

3. Use the edge of a razor blade to spread the grease throughout the entire contact surface and lightly scrape off any excess grease. Make sure that you only apply a very thin layer so that the contact surface is still visible.

CAUTION: Never touch the contact area of the processor. Any contaminant could prevent the mounting pads from making contact with the socket.

CAUTION: Applying too much grease creates a gap between the contact surfaces, significantly reducing the ability of the cooler to draw out heat. Installing the cooler with excessive grease can also cause the grease to spread over the processor pins or the system board base, which can cause electrical shorts that damage the system.

4. Holding the processor by the edges, insert the processor into the socket.

CAUTION: Ensure that the processor is correctly positioned with the orientation notch on the socket and that the pins are aligned correctly with the socket holes (Figure 3-23, 1).

5. Close the retention plate (3) and lower and engage the load lever (4) to fully seat the processor.

Figure 3-23 Installing a processor

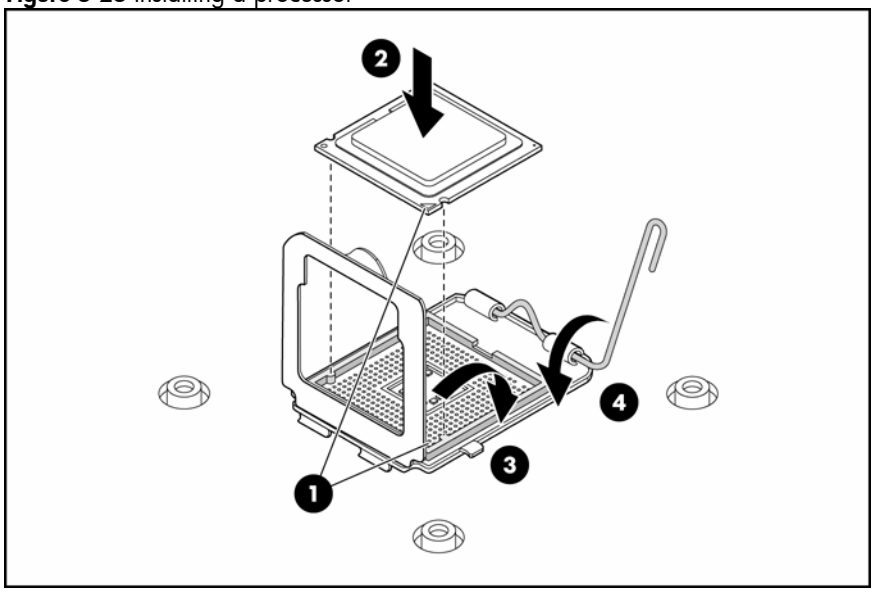

CAUTION: After you install the processor, the heatsink must be reinstalled on top of the processor socket. The thermal grease applied on the contact surfaces of the processor provides the necessary thermal bonding to allow the heatsink to draw away heat from the processor.

6. Properly align the heatsink mounting screws to the system board mounting holes so that the air flow indicator arrow on the top of the heatsink should point toward the rear of the chassis (Figure 3-24, 1) and tighten with a screwdriver (2).

CAUTION: Do not over-tighten heatsink mounting screws.

Figure 3-24 Installing the heatsink assembly

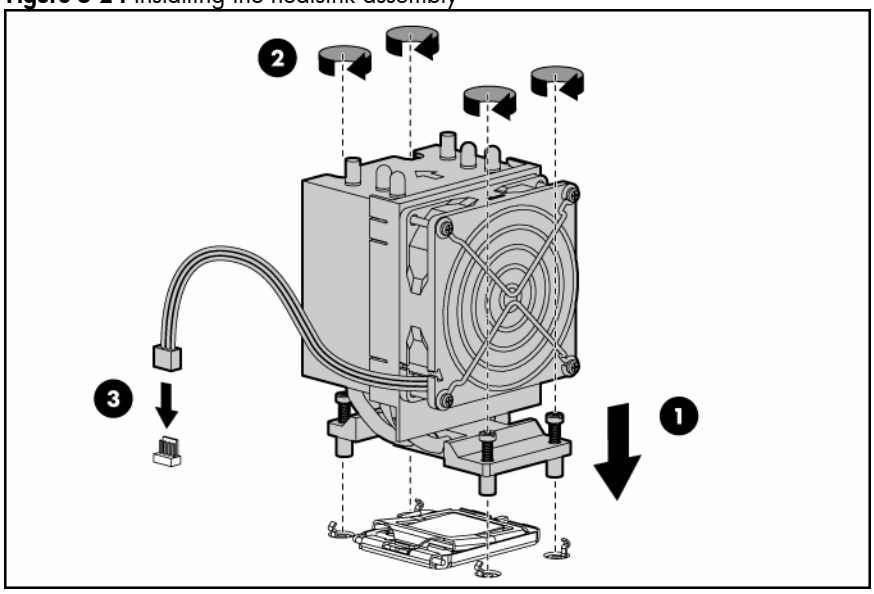

7. Connect the processor fan cable to system board connector (3) (Processor 0 fan cable connects to J28, Processor 1 fan cable connects to J27).

CAUTION: Failure to connect the processor fan cable to the system board may result in damage to the processor and could cause the server to shut down **without** displaying messages.

8. Align the air baffle guide pins with the holes on the chassis support bar and lower it into place.

Figure 3-25 Installing the air baffle

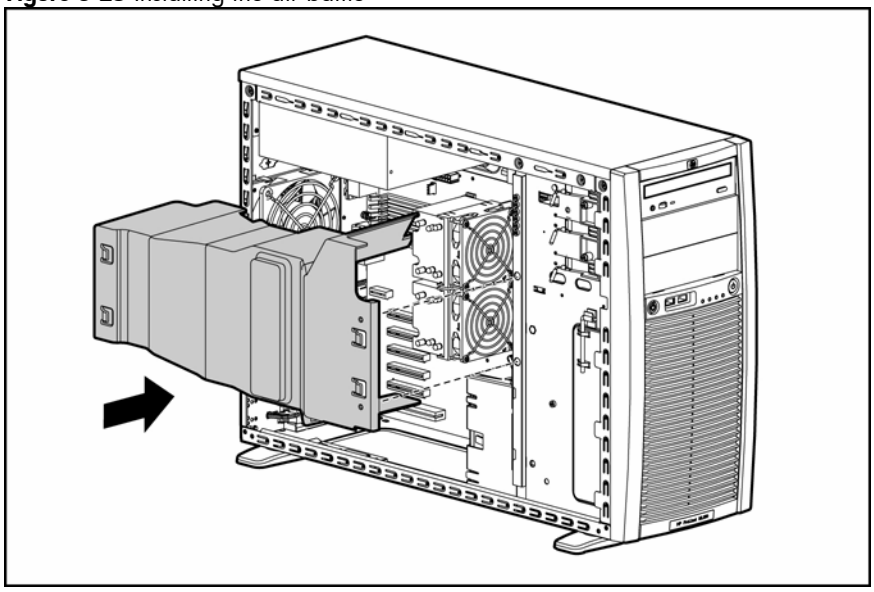

End of procedure.

Memory

The HP ProLiant ML150 Generation 5 server provides six DIMM slots that support up to16 GB of system memory.

Figure 3-26 DIMM slots

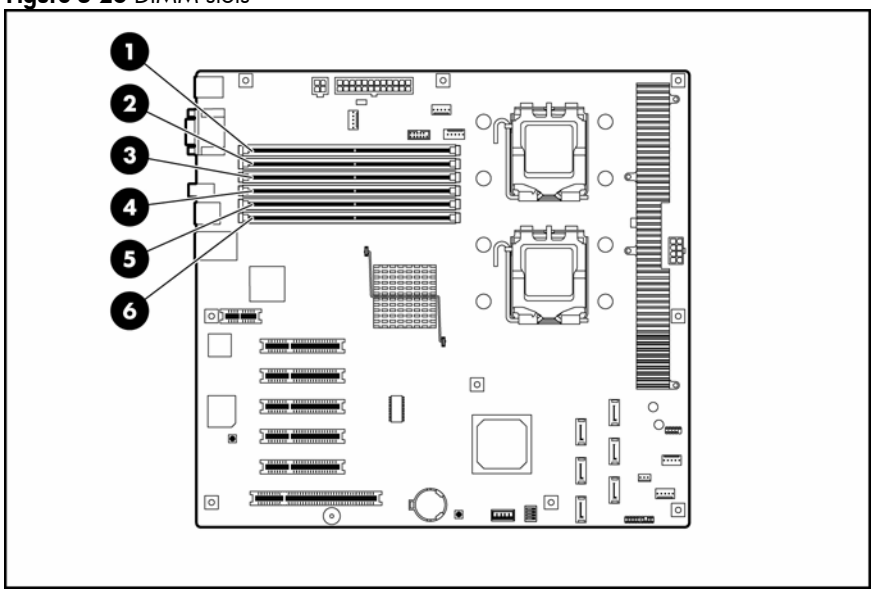

Item	Description
1	DIMM slot 1A (single/dual-rank)
2	DIMM slot 2A (single/dual -rank)
3	DIMM slot 3B (single/dual -rank)
4	DIMM slot 4B (single/dual -rank)
5	DIMM slot 5C (single-rank)
6	DIMM slot 6C (single-rank)

Guidelines for installing memory modules

Use the following guidelines when adding or replacing memory modules:

- Use only registered 533-/667-MHz, DDR2 ECC DIMM.
- Supported DIMM capacities: 512-MB, 1-GB, 2-GB, 4-GB
- Supported technologies: 256-Mb, 512-Mb, 1-Gb, 2-Gb, and 4-Gb for x4 and x8 devices
- For best performance, DIMMs should be installed in symmetrical (balance-capacity) pairs.
- Slot 5C and 6C can not be populated with a configuration using four dual-rank DIMMs.

Table 3-2 DIMM Configuration Table

1A & 2A	3B & 4B	5C & 6C
Single Rank	--	--
Single Rank	Single Rank	--
Single Rank	Single Rank	Single Rank

Table 3-2 DIMM Configuration Table

1A & 2A	3B & 4B	5C & 6C
Dual Rank	--	--
Dual Rank	Single Rank	--
Dual Rank	Single Rank	Single Rank
Dual Rank	Dual Rank	--

To remove a memory module:

1. Power down the server.
2. Disconnect the power cord(s).
3. Unlock the server if necessary and remove the access panel as described in the section "System covers."
4. Remove the air baffle by pulling up slightly on the four tabs and lifting the baffle away from the chassis.
5. Completely open the holding clips securing the module (1).
6. Gently pull the memory module upward to remove it from the slot (2).

Figure 3-27 Removing a memory module (DIMM)

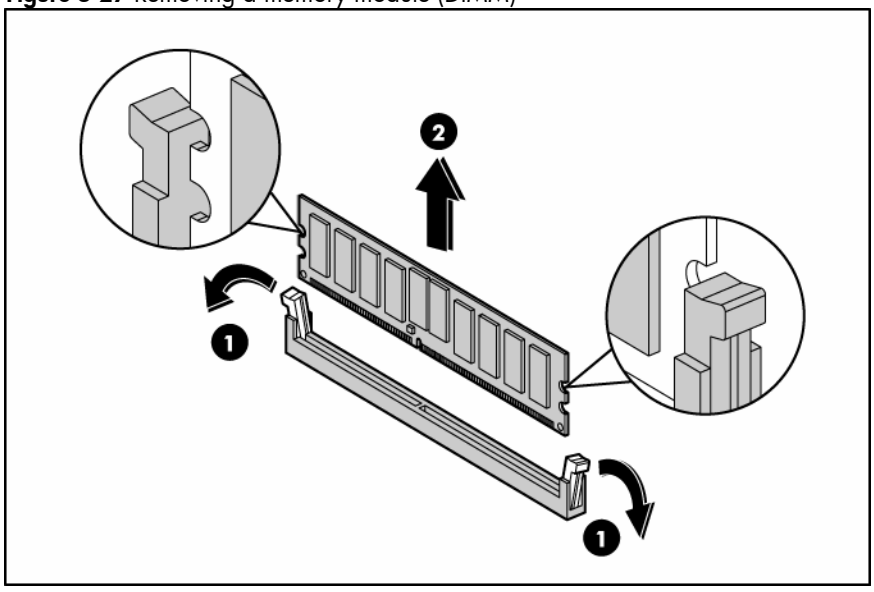

△ **CAUTION:** Place the memory module on a static-dissipating work surface or inside an anti-static bag.

To install a memory module:

1. Completely open the holding clips..
2. Orient the module so that the notch on the bottom edge of the module aligns with the keyed surface of the DIMM slot, and then press it fully into the slot (1).
3. Firmly press the holding clips inward to secure the memory module in place (2).

Figure 3-28 Installing a memory module (DIMM)

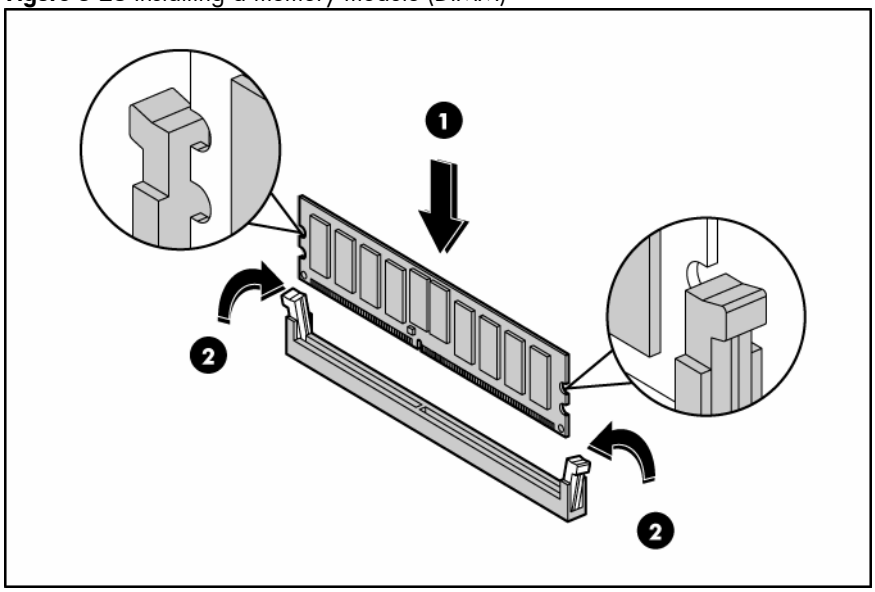

CAUTION: The memory slots are structured to ensure proper installation. If a memory module does not fit easily into the slot, it may be inserted incorrectly. Double-check the orientation of the module and reinsert. If the holding clips do not close completely, the module is not inserted correctly.

End of procedure.

Expansion cards

The server provides seven expansion slots as shown in Figure 3-29.

- One Peripheral Component Interconnect (PCI) 2.3-compliant slot
- Three PCI Express (PCIe) x4 slots
- Two PCIe x8 slots
- One Intelligent Platform Management Interface (IPMI) slot

Figure 3-29 Expansion slot locations

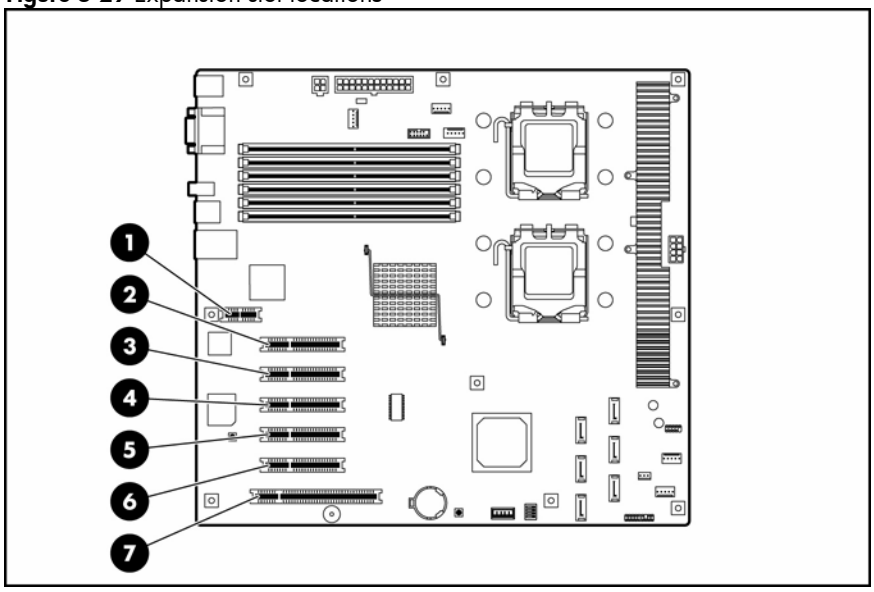

Item	Description
1	Expansion slot 7: IPMI connector
2	Expansion slot 6: PCIe x8 connector (x8 lane support)
3	Expansion slot 5: PCIe x8 connector (x8 lane support)
4	Expansion slot 4: PCIe x8 connector (x4 lane support)
5	Expansion slot 3: PCIe x8 connector (x4 lane support)
6	Expansion slot 2: PCIe x8 connector (x4 lane support)
7	Expansion slot 1: PCI 2.3-compliant connector

Installing an expansion card

To install an expansion card:

1. Power down the server.
2. Disconnect the power cord(s).
3. Unlock the server if necessary and remove the access panel as described in the section "System covers"
4. From the inside of the chassis, press the expansion card holder (blue, 1) down and push slightly out the rear of the chassis to release the expansion card holder (2).

Figure 3-30 Releasing the expansion card holder

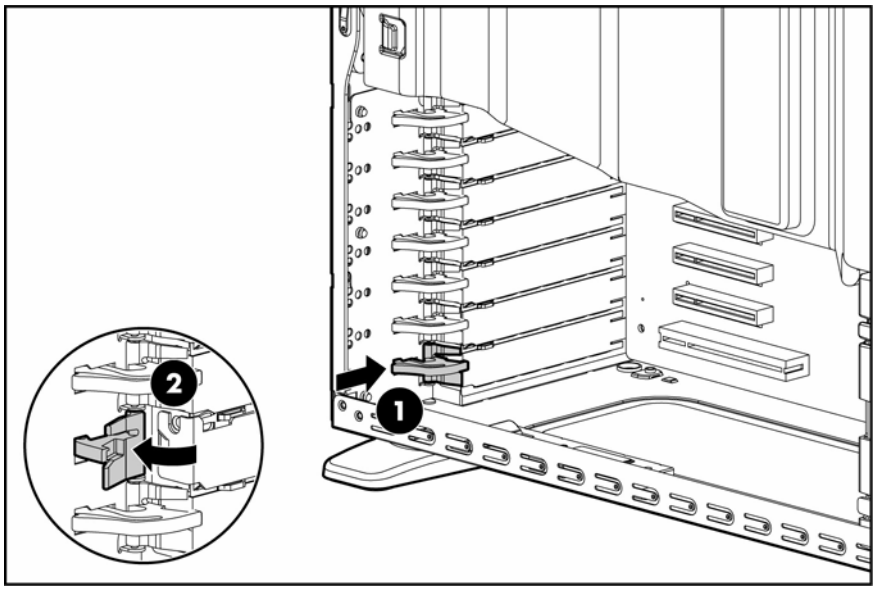

5. Remove the expansion slot cover.

6. Position the expansion card over the expansion slot connector and push down (1).

CAUTION: When installing an expansion card, hold the card just above the expansion slot on the system board, and then move the card toward the rear of the chassis so that the bracket on the card is aligned with the open slot on the rear of the chassis.

7. Return the blue expansion card holder to its locked position by pressing the lever from the outside until it snaps into position in the rear panel, securing the expansion card into the slot (2).

Figure 3-31 Installing an expansion card

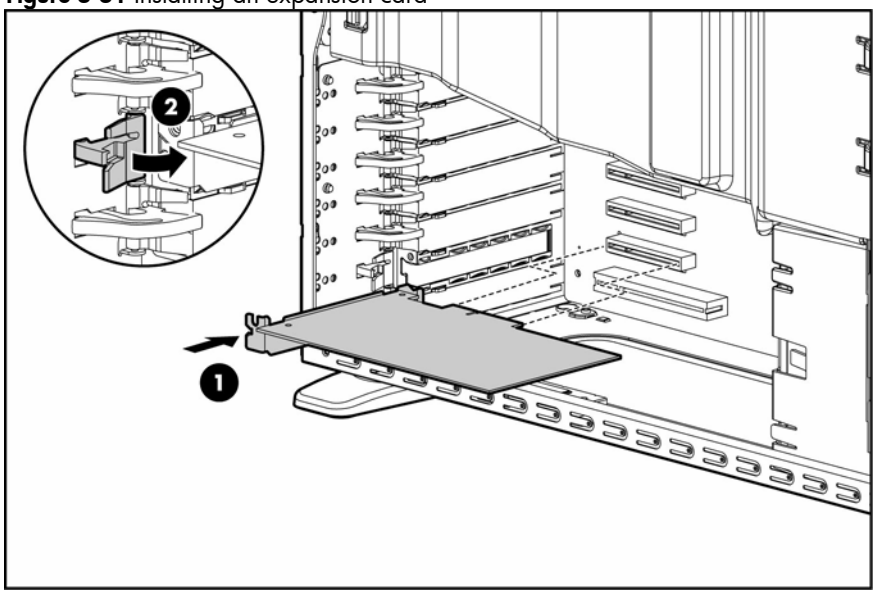

8. Connect any interior cables associated with the installed expansion card.
9. Replace the side access cover.
10. Reconnect the power cord(s).

End of procedure.

Removing an expansion card

To remove an expansion card, reverse steps 1 through 10 of "Installing an expansion card."

CAUTION: If replacing an expansion card, store the old card in the anti-static packaging that contained the new card.

CAUTION: If removing an expansion card, slot covers must be installed in empty slots to maintain proper system cooling.

System battery

The server uses nonvolatile memory that requires a 3-volt lithium coin cell battery to retain system information when power is removed. The battery is located on the system board as item 1 shown in Figure 3-32.

Figure 3-32 System battery location

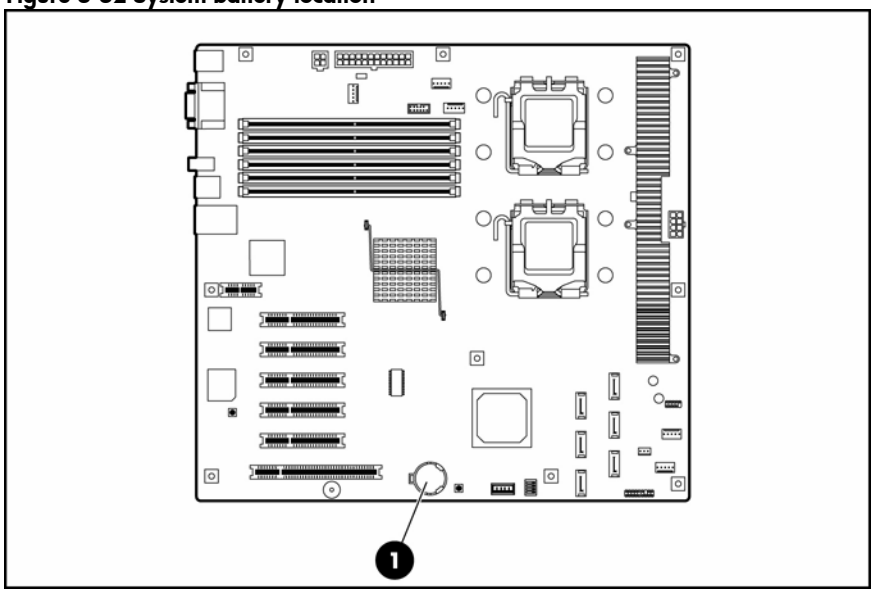

WARNING: When replacing the system battery…

- Replace the battery with the same type as the battery recommended by HP. Use of another battery type may present a risk of fire or explosion.
- A risk of fire and chemical burn exists if the battery is not handled properly. Do not disassemble, crush, puncture, or short external contacts, or expose the battery to temperatures higher than 60°C (140°F).
- Do not dispose of a used battery in water or fire. Dispose of used batteries according to manufacturer's instructions.

CAUTION: Loss of BIOS settings occurs when the battery is removed. The BIOS must be reconfigured after replacing the battery.

NOTE: If the server no longer automatically displays the correct date and time, you may need to replace the system battery. Under normal usage, battery life is five to ten years.

To remove and replace the system battery:

1. Power down the server.
2. Disconnect the power cord(s).
3. Unlock the server if necessary and remove the access panel as described in the section "System covers."
4. Release the battery from its holder by squeezing the metal clamp that extends above one edge of the battery. When the battery pops up, lift it out (Figure 3-33, 1).
5. To insert the new battery, slide one edge of the replacement battery under the holder's lip with the positive side up. Push the other edge down until the clamp snaps over the other edge of the battery (2).

Figure 3-33 Replacing the system battery

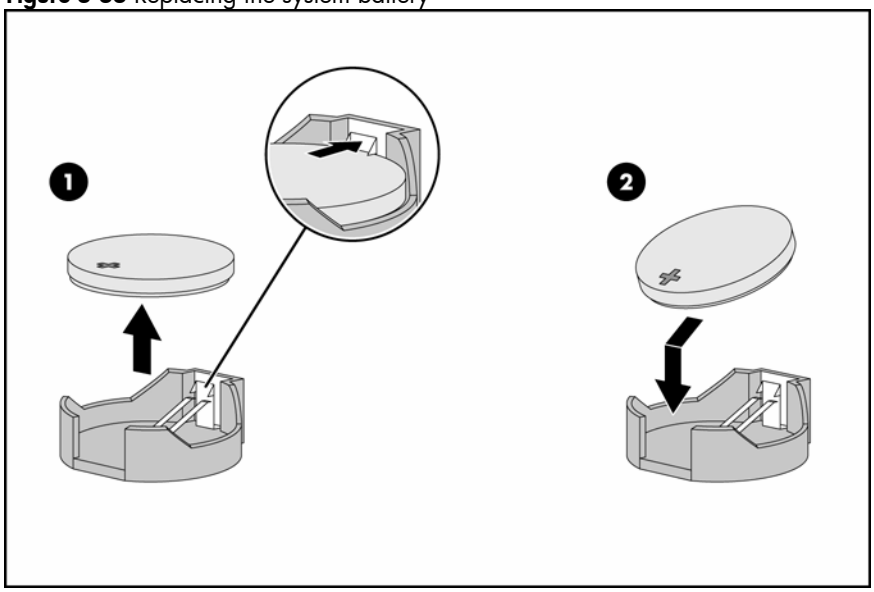

End of procedure.

System fans

The server includes two system fan assemblies; a front fan/PCI card holder assembly and a rear fan assembly.

Front fan/PCI card holder assembly removal and replacement

To remove the front fan/PCI card holder assembly:

1. Power down the server.
2. Disconnect the power cord(s).
3. Unlock the server if necessary and remove the access panel as described in the section "System covers."
4. Remove all full-size expansion cards as described in the section "Removing an expansion card."
5. On the front fan/PCI card holder assembly, press the thumb lever down slightly (Figure 3-34, 1) and slide the assembly a short distance toward the top of the server chassis (2).

Figure 3-34 Removing the front fan/PCI card holder assembly

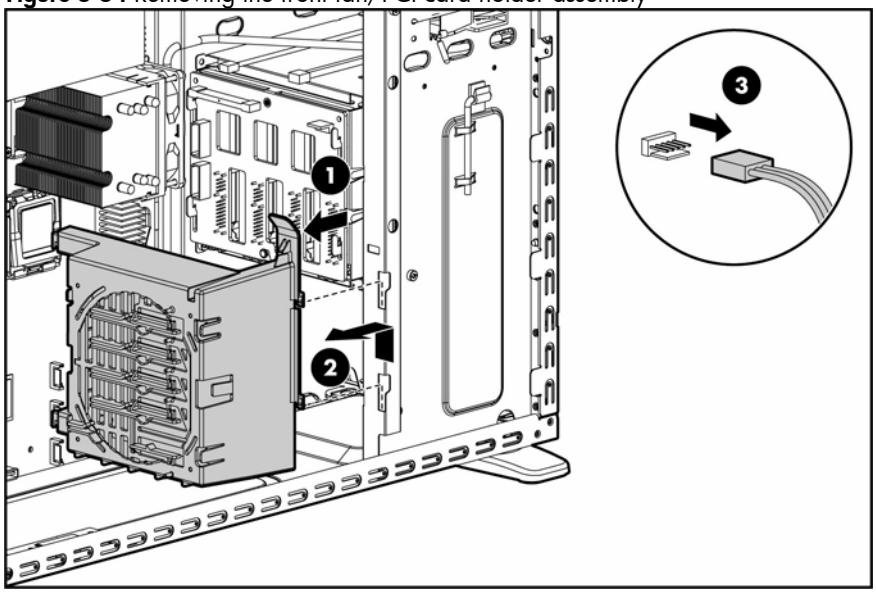

6. Rotate the fan assembly toward the rear of the chassis and lift away from the mounting slots, **but not completely from the chassis**.
7. While supporting the front fan/PCI card holder assembly with one hand, disconnect the fan cable from system board connector J35 (3).
8. Remove the front fan/PCI card holder assembly the chassis.

End of procedure.

To replace the front fan/PCI card holder assembly, reverse steps 1 through 8.

Rear fan assembly removal and replacement

To remove the rear fan assembly, proceed as follows:

1. Power down the server.
2. Disconnect the power cord(s).
3. Unlock the server if necessary and remove the access panel as described in the section "System covers."
4. Remove the air baffle as described in the section "Removing a processor."
5. Disconnect the fan cable from system board connector J4.
6. While supporting the fan with one hand on the inside, press the center blue disc of the fan assembly from the outside inward (Figure 3-35, 1). When the blue disc is clear of the rear panel slide the fan assembly toward the power supply so that the four mounting tabs can clear the slots and remove the fan assembly (2).

⚠ **WARNING:** Be sure to support the fan with your hands when removing it from the chassis. The fan could fall and cause personal injury or equipment damage if not supported.

7. Disconnect the fan cable from the system board connector J4 (3).

Figure 3-35 Removing the rear chassis fan assembly

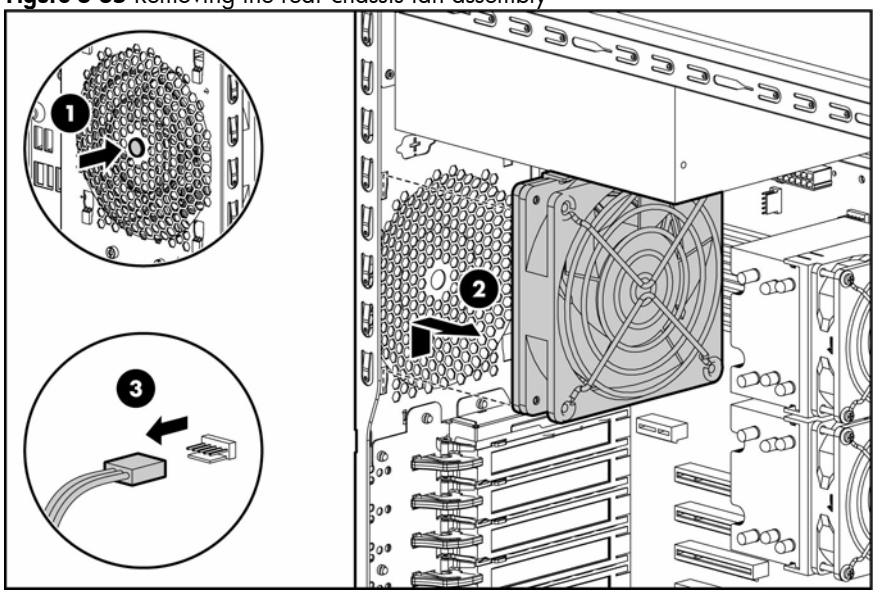

8. Lift the fan assembly away from the rear panel and from the chassis.

To replace the rear fan assembly:

1. Connect the fan cable to system board connector J4 (Figure 3-36, 1).
2. Align and insert the four mounting tabs of the fan assembly with the slots on the rear panel (2).
3. Slide the fan assembly toward the expansion slots until it snaps into place.

Figure 3-36 Installing a rear system fan

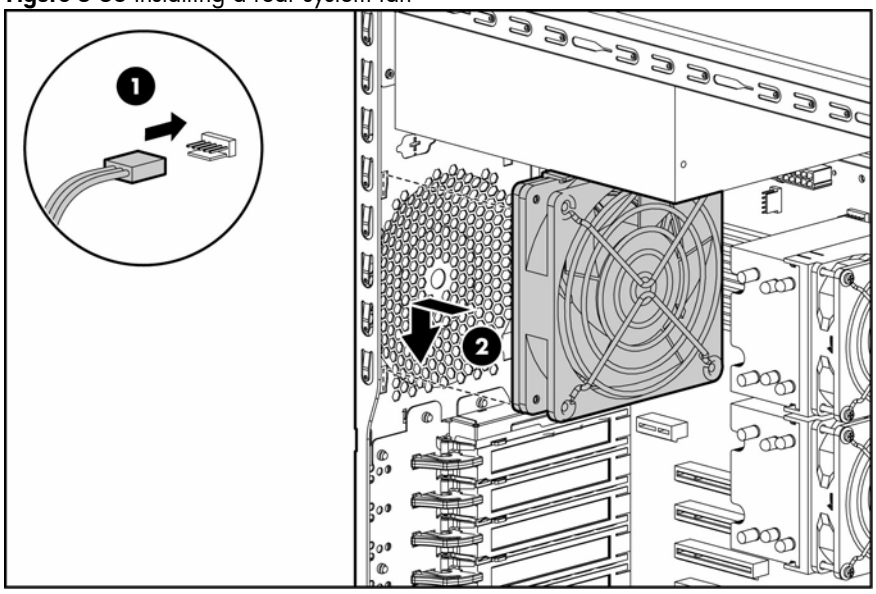

4. Replace the air baffle.
5. Replace the access panel and reconnect the power cord(s).

End of procedure.

System board removal and replacement procedure

Removing the system board

To remove the system board, proceed as follows:

1. Power down the server.
2. Disconnect the power cord(s).
3. Unlock the server if necessary and remove the access panel as described in the section "System covers."
4. Place the server on its side with the open side up.
5. Remove all expansion cards as described in the section "Removing an expansion card."
6. Remove the system fans as described in the section "System fans."
7. Remove the processor heatsink(s) as described in the section "Removing a processor."

NOTE: If the system board is to be reused, only the processor heatsink needs to be removed for this procedure. The processor(s) can be left in the socket(s).

---

8. Disconnect all power supply cables from the system board.
9. Disconnect all mass storage device data cables from the system board.

10. Locate the nine mounting screws from the system board (indicated by arrows in the following figure).

Figure 3-37 System board mounting screw locations

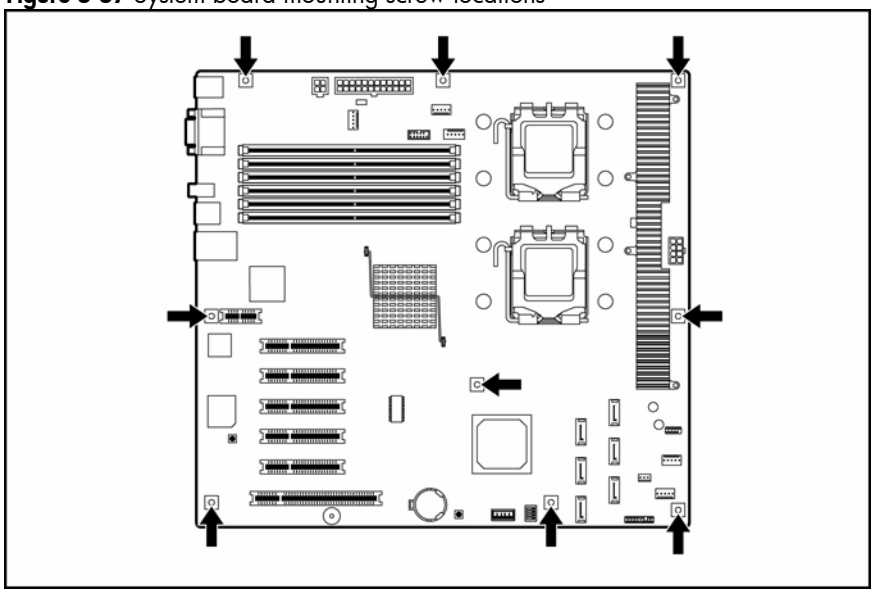

11. Loosen and remove the mounting screws from the system board (Figure 3-38, 1).
12. Grasping the system board by the edges, lift the front edge of the system board up slightly, pull the board away from the rear panel and lift up from the chassis (2).

Figure 3-38 Removing the system board

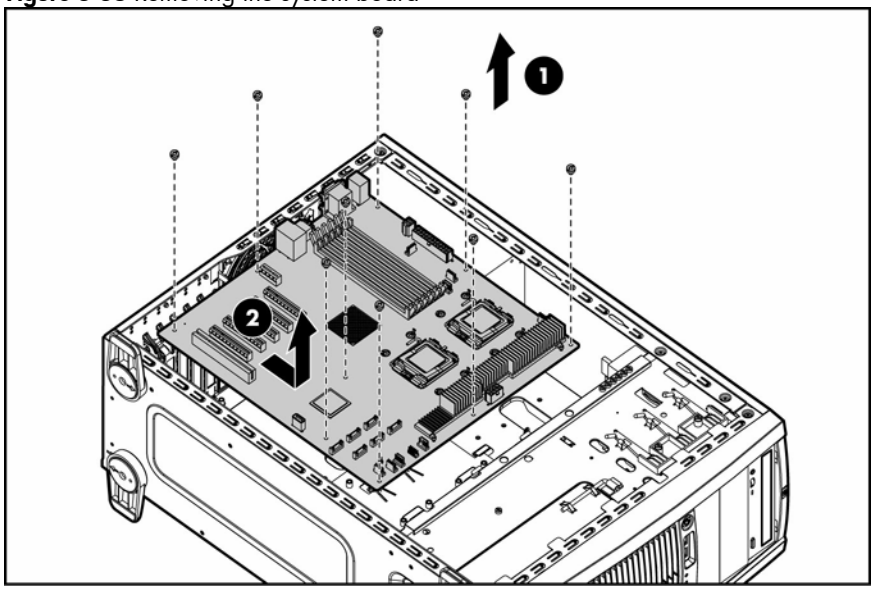

13. Place the board on a grounded mat or in a protective anti-static bag.

End of procedure.

Replacing the system board

To replace the system board, proceed as follows:

1. Lower the system board into the chassis, tilting the rear edge down first so that the rear port connectors align with the rear panel cutouts, then lower the front edge down until it is level (Figure 3-39, 1). Ensure that the mounting holes on the board are aligned with the screw taps on the chassis.
2. Insert and tighten the nine mounting screws (2).

Figure 3-39 Replacing the system board

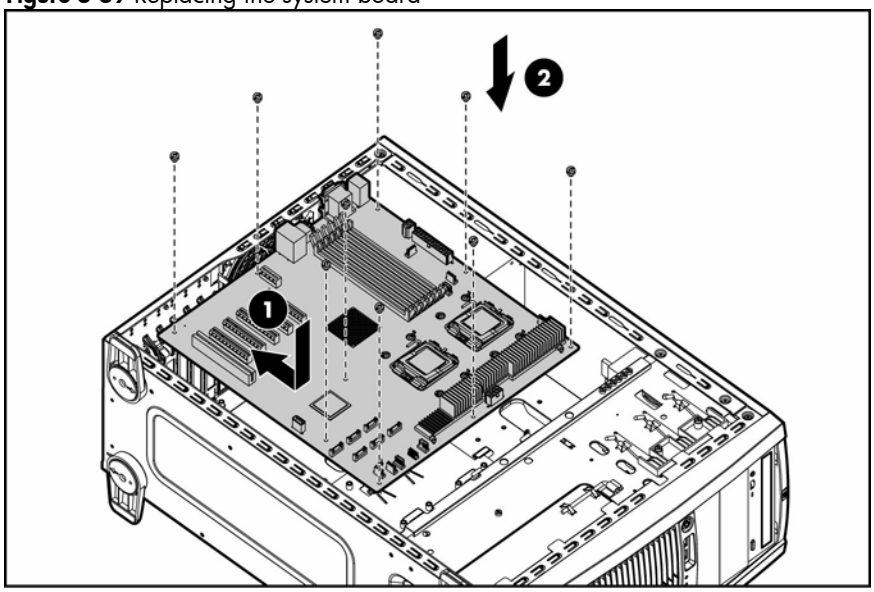

3. Install the processor heatsink(s) as described ion the section “Replacing the processor.”
4. Install the system fans as described in the section “System fans.”
5. Install any expansion cards as described in the section “Installing an expansion card.”
6. Return the server to an upright position.
7. Replace the access panel.
8. Connect the power supply cord(s).

End of procedure.

Power supply unit (PSU)

The standard server configuration includes a single, auto ranging 650-watt power supply unit (PSU) with power factor correction (PFC). The server can be upgraded by replacing the standard PSU with a redundant power supply (RPS) unit.

⚠ **WARNING:** Note the following reminders to reduce the risk of personal injury from electric shock hazards and/or damage to the equipment.

- Installation of the power supply unit should be referred to individuals who are qualified to service server systems and are trained to deal with equipment capable of generating hazardous energy levels.
- DO NOT open the power supply unit. There are no serviceable parts inside the power supply unit.

⚠ **WARNING:** To prevent possible personal injury and damage to system components, HP recommends performing this procedure with the server placed on its side with the open side up.

Removing a PSU

To remove the PSU proceeds as follows:

1. Power down the server.
2. Disconnect the power cord.
3. Unlock the server if necessary and remove the access panel (refer to the section “System covers.”
4. Remove the air baffle as described in the section “Removing a processor.”
5. Place the server on its side with the open side up.
6. Disconnect all power supply cables from the system board, mass storage devices, and/or backplane.

7. Remove the six mounting screws that secure the PSU to the rear chassis panel.

WARNING: The PSU is heavy and can cause personal injury or damage system components.

Figure 3-40 Removing the PSU mounting screws

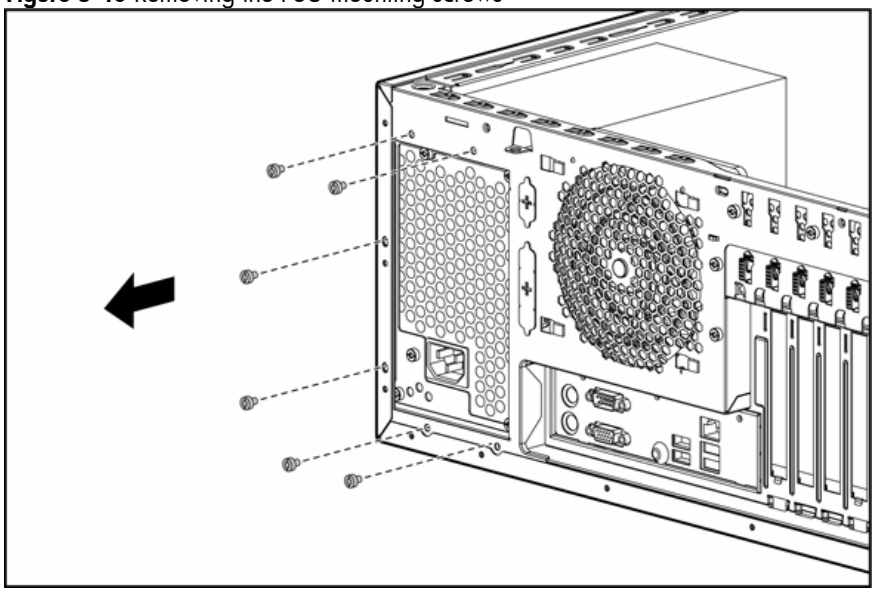

8. Slightly lift up the power supply and then push toward the front of the chassis until it clears the support ledge.
9. Tilt the power supply toward processor 0 and carefully remove it from the chassis.

Figure 3-41 Removing the PSU (cables not shown)

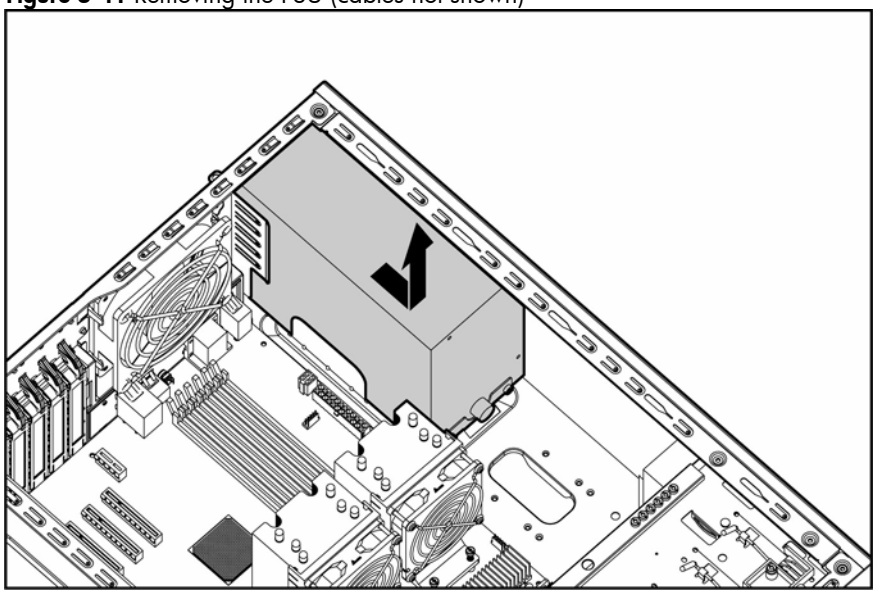

Installing a PSU or RPS

To install a PSU or RPS:

1. Tilting the power supply slightly, lower the unit into the chassis and slide over the support ledge to the rear of the chassis until it is flush against the rear panel.

Figure 3-42 Installing a PSU or RPS (RPS unit shown)

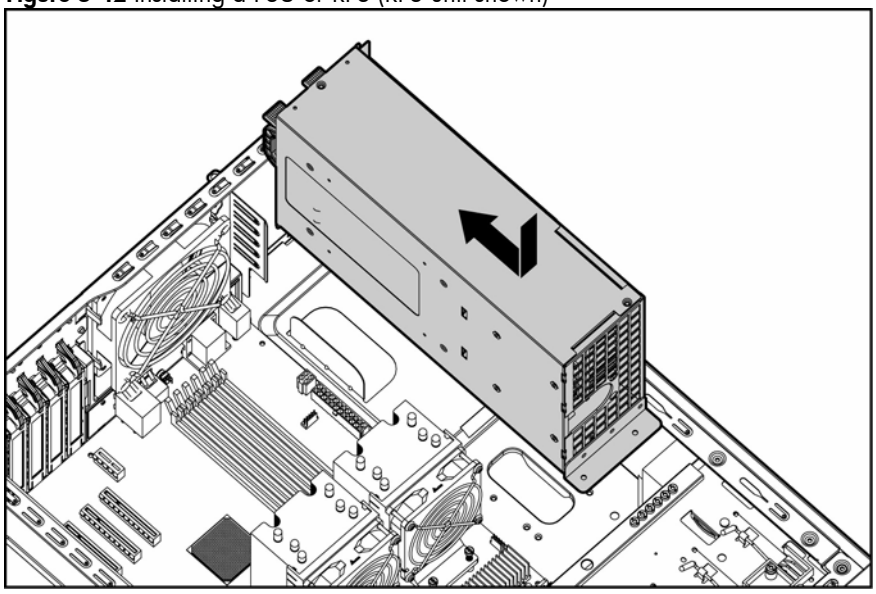

2. Secure the power supply to the rear chassis panel using the six mounting screws.

Figure 3-43 Installing the rear mounting screws (RPS unit shown)

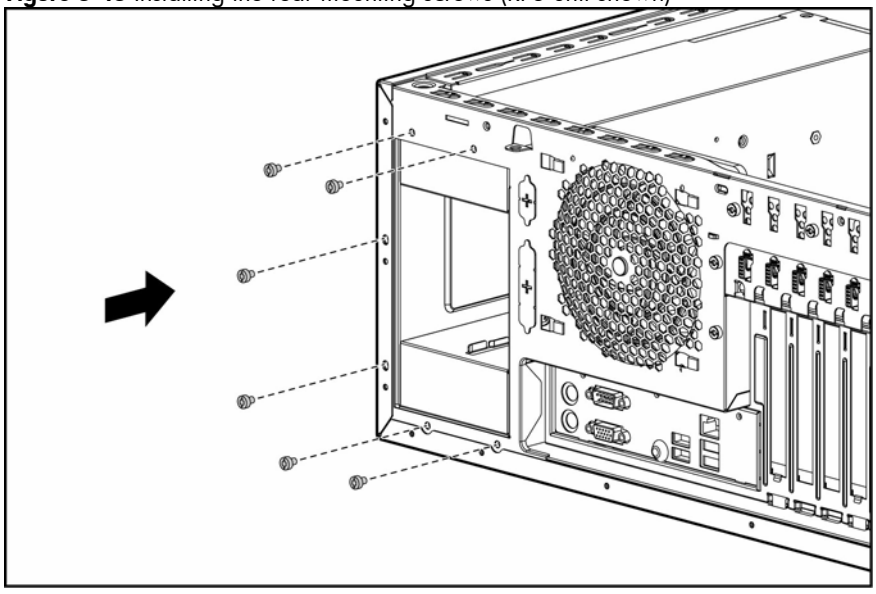

3. If installing an RPS, install the two additional mounting screws at the front of the RPS assembly.

Figure 3-44 Installing additional RPS mounting screws (cables not shown)

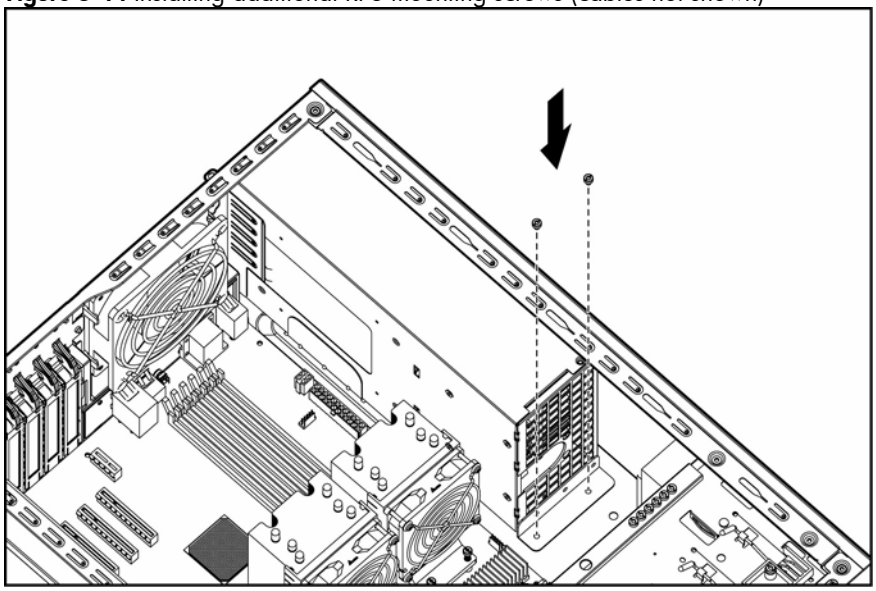

4. If installing an RPS, install the two power supplies into the RPS shell:
   a. Slide a power supply into a power supply bay until the release latch clicks.
   b. Repeat step a for the second power supply.

Figure 3-45 Installing two power supplies into the RPS shell

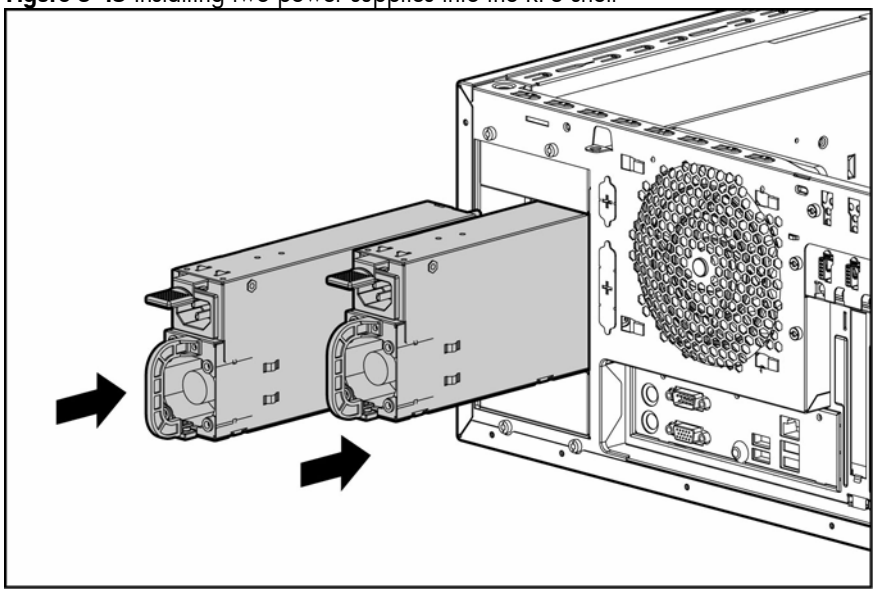

5. Reconnect all power cables to the system board, mass storage devices, and/or backplane.
6. Replace the air baffle.
7. Return the server to the upright position.
8. Replace the access panel.
9. Connect the power cord(s).

End of procedure.

4 Diagnostic Tools and Setup Utilities

This chapter provides an overview of the Power-On Self-Test (POST), the POST error messages, and BIOS, SAS and SATA setup utilities.

BIOS Software

The ProLiant ML150 Generation 5 server uses BIOS to boot up the system. BIOS software is a ROM BIOS-based firmware that allows reliability, manageability, and connectivity for server platforms. This software contains a set of programs permanently stored in an EEPROM chipset located on the system board. These programs assist in managing, initializing, and testing the hardware devices installed on the computer.

BIOS software allows you to:

- Perform configuration from the BIOS Setup Utility

  Using the Setup Utility, you can install, configure, and optimize the hardware devices on the system board. In addition, you can enable various features such as serial console redirection, hyper-threading, PXE boot, and much more.
- Initialize hardware at boot up using POST routines

  During power-on or warm reset, the BIOS performs Power-On Self Test (POST) routines to test system components, to allocate resource for various hardware devices, and to prepare the system to boot to various operating systems.

BIOS Setup Utility

The BIOS Setup Utility provides the user with general system information and allows the user to configure the server for optimum performance and security. If any operational problems occur after changing BIOS parameters, the BIOS Setup Utility allows the user to restore the server to the default or failsafe values.

Accessing the BIOS Setup Utility

To access the BIOS Setup Utility, perform the following steps:

1. Turn on the monitor and server. If the server is already turned on, save your data and exit all open applications, then restart the server.
2. When the HP logo is displayed during POST, press **F10**. After a few moments, the Main menu will be displayed (Figure 4-1). NOTE: If you fail to press **F10** before POST is completed, you will need to restart the server.

Figure 4-1 Main menu of the BIOS Setup Utility

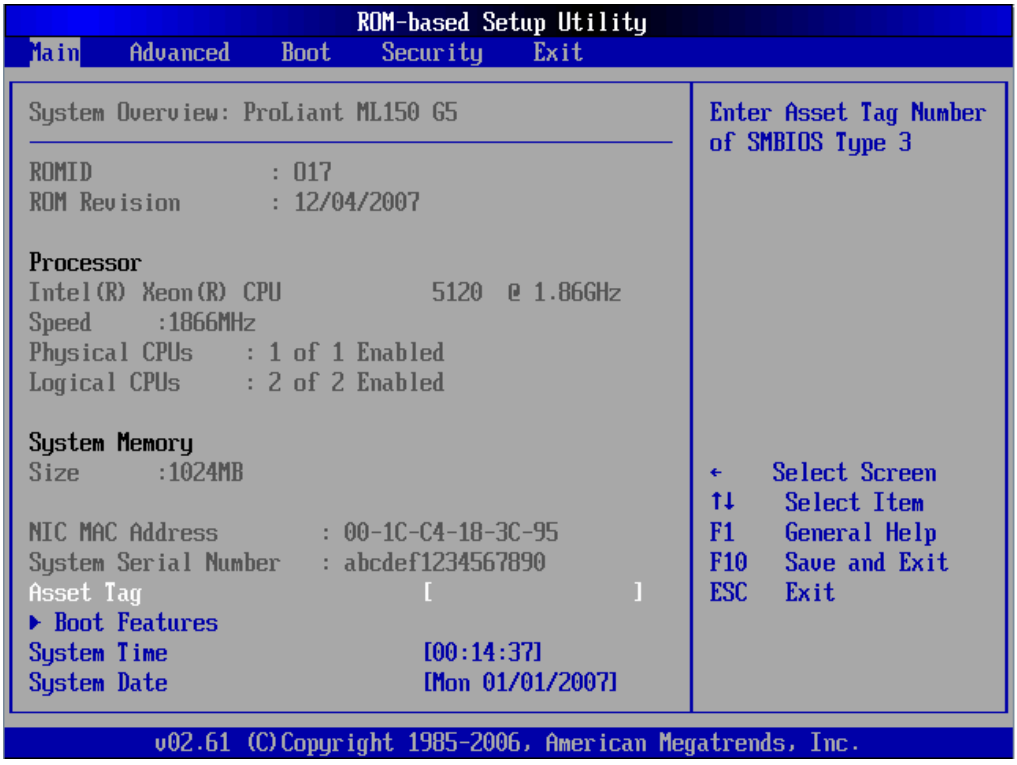

Navigating through the Setup Utility

Table 4-1 lists and describes the keys used for navigating through the Setup Utility menus and selecting and changing parameters. Pressing **F1** from the Main menu displays a pop-up menu that also displays most of the navigation keys and their functions.

Table 4-1 Setup Utility Navigation Keys

Key	Function
← and →	When pressed, these keys select the primary menu on the top menu bar.
↑ and ↓	When pressed, these keys select the field. The currently selected field will be highlighted. The right side of each menu screen displays a field/item-specific help panel, and displays the help text for the currently selected field.
+ and –	When pressed, these keys select a value or option for the currently selected field (only if it is user-configurable). Press the (+), (–) keys repeatedly to display each possible entry, or the **Enter** key to choose from a pop-up menu. Parameters that are enclosed in square brackets [ ] are user-configurable. Grayed-out parameters are not user-configurable for one of the following reasons: ● The field value is auto-configured or auto-detected. ● The field value is informational only. ● The field is password-protected.
Enter	When pressed, this key performs one of the following: ● Selects a field value or display a submenu screen. ● Displays more options for selected item (marked with ▶) ● Expands all device list
Esc	When pressed, his key performs one of the following: ● From a primary menu screen, displays the Exit menu. ● From a submenu screen, displays the previous screen. ● From a pop-up window, closes the pop-up window without making a selection.
Page Up or **Page Down**	When pressed, displays the previous/next page on scrollable menus.
Home or **End**	When pressed, moves the cursor to the top/button item of current menu.
F1	When pressed, displays the General Help window. The General Help window describes other Setup navigation keys that are not displayed on the legend bar.
F2 or **F3**	When pressed, changes the Setup Utility screen color.
F7	When pressed, discards the change value.
F8	When pressed, loads the failsafe default system values.
F9	When pressed, loads the default system values.
F10	When pressed, saves changes and closes the Setup Utility.

The BIOS Setup Utility allows the user to view and configure the server subsystems through five primary menus:

- Main
- Advanced
- Security
- Boot
- Exit

The following sections show and describe the Setup Utility menus.

Main menu

The Main menu (Figure 4-2) provides general BIOS, processor, memory, and system identification information. The main menu allows the user to:

- View BIOS information
- View processor type, speed, and number information.
- View system memory size.
- View MAC address for the embedded NIC.
- View System serial ID.
- Enter server Asset Tag Text.

The General Help pop-up window is always available by pressing the **F1** key.

Figure 4-2 Main menu and General Help screen

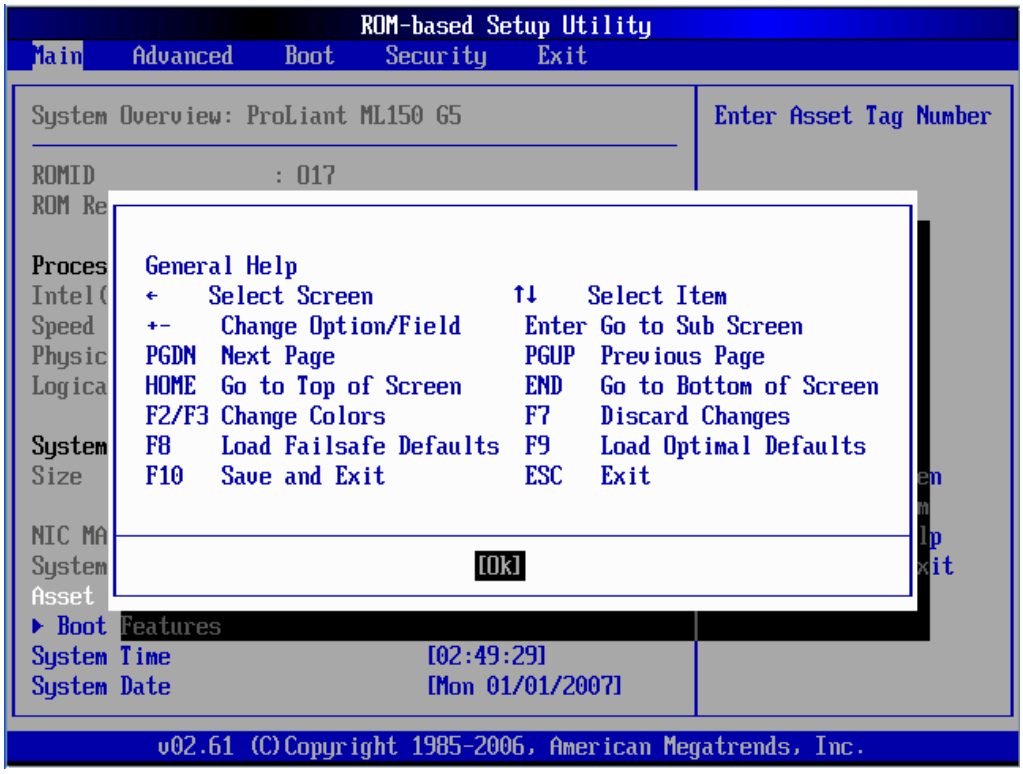

The screen in Figure 4-2 has the selection arrow set to select the **Boot Features** sub menu. Pressing the **Enter** key calls up the Boot Features sub menu (Figure 4-3).

The Boot Features submenu (Figure 4-3) allows the user to set which type of event(s) that will occur during the boot process.

Figure 4-3 Main menu–Boot Features submenu

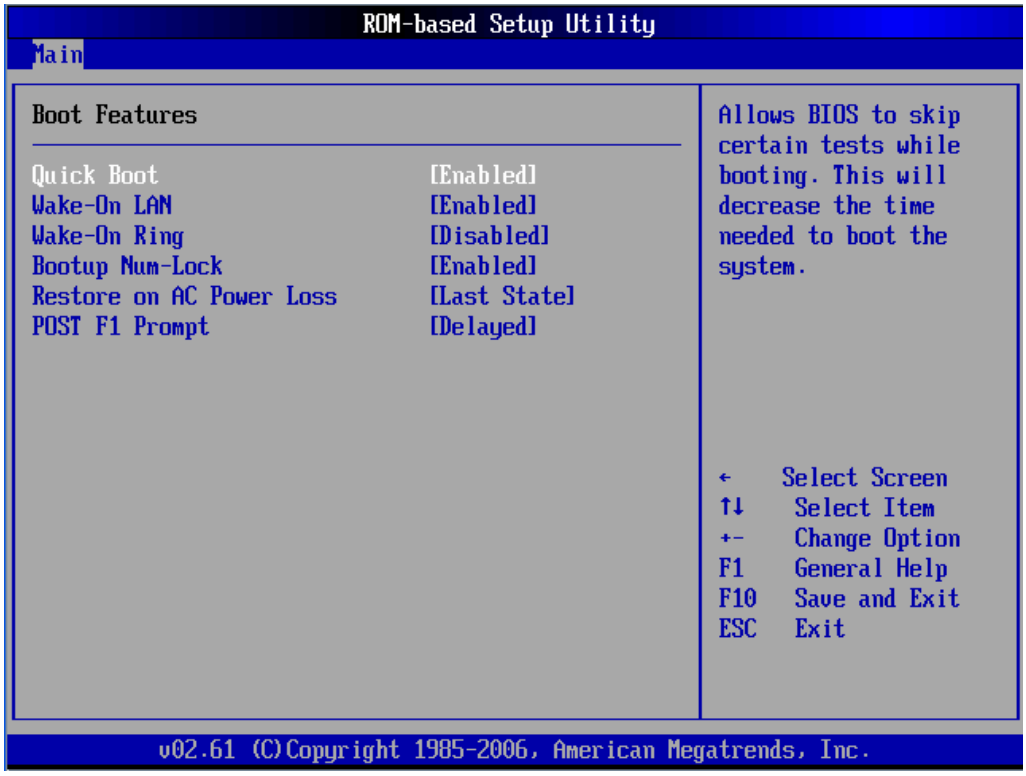

Advanced Menu

The Advanced menu (Figure 4-4) allows the user to configure the following:

- **CPU Configuration** – Configure the CPU (processor), Enable or disable the Hyper Threading (HT) features for the processor to utilize its execution resources more efficiently as two virtual processors, and enable or disable the Vanderpool technology features for the processor supported.
- **Harddisk Configuration** – Configure the hard disk settings of the server, view CD-ROM status and SATA hard drive status.
- **I/O Device Configuration** – Configure the serial port settings of the server.
- **IPMI** – Configure the Intelligent Platform Management Interface (IPMI) settings
- **Console Redirection** – Configure the settings when redirect the console to a serial port.
- **USB Configuration** – Configure the USB settings of the server.
- **Virtual Floppv** – Virtual floppy support enable/disable.
- **KB/MS OS IRQ** – Operating system trip IRQ support enable/disable.
- **MCH Channel Mode** – Support MCH channel change to "Sequencing," "Interleave," or "Single" mode.

Figure 4-4 Advanced menu

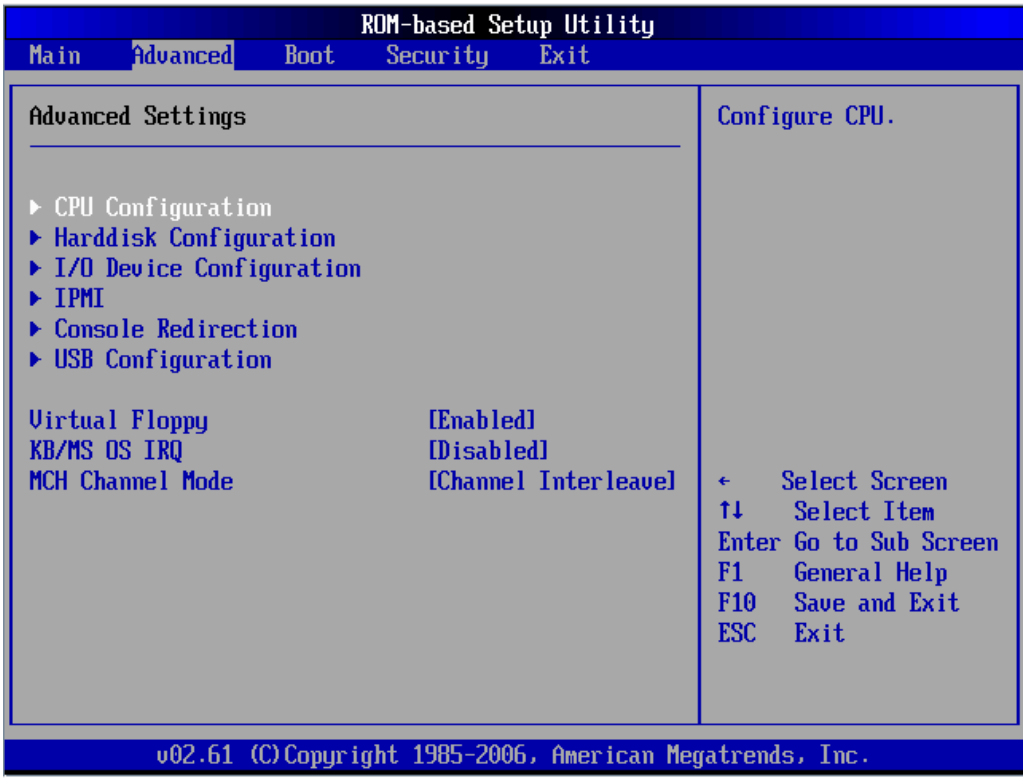

⚠ **WARNING:** Incorrect settings may cause the server to malfunction. To correct the settings, press F9 key to restore the default settings.

The specific advanced settings that are user-configurable are accessible through the Advanced Settings submenus shown in Figures 4-5 through 4-14.

Figure 4-5 Advanced menu–CPU Configuration submenu

```
                    ROM-based Setup Utility
                    Advanced

Configure advanced CPU settings                  This should be enabled
                                                 in order to enable or
Hardware Prefetcher              [Enabled]       disable the Hardware
Adjacent Cache Line Prefetch     [Enabled]       Prefetcher Disable
Intel(R) Virtualization Tech     [N/A]           Feature.
Core Multi-Processing            [Enabled]
Intel(R) SpeedStep(tm) Tech      [Enabled]

                                                 ←    Select Screen
                                                 ↑↓    Select Item
                                                 +-    Change Option
                                                 F1    General Help
                                                 F10   Save and Exit
                                                 ESC   Exit

        v02.61 (C)Copyright 1985-2006, American Megatrends, Inc.
```

Figure 4-6 Advanced menu–Harddisk Configuration submenu

```
                    ROM-based Setup Utility
                    Advanced

Harddisk Configuration                           Options

SATA Controller 1                [Compatible]
  Configure Controller 1 as      [IDE]           Disabled
SATA Controller 2                [Enhanced]      Compatible
                                                 Enhanced
▶ Primary Master                 : [Not Detected]
▶ Second Master                  : [Not Detected]
▶ Primary Slave                  : [Not Detected]
▶ Second Slave                   : [Not Detected]
▶ Third Master                   : [Not Detected]
▶ Fourth Master                  : [Not Detected]
                                                 ←    Select Screen
                                                 ↑↓    Select Item
                                                 +-    Change Option
                                                 F1    General Help
                                                 F10   Save and Exit
                                                 ESC   Exit

        v02.61 (C)Copyright 1985-2006, American Megatrends, Inc.
```

Figure 4-7 Advanced menu–I/O Configuration submenu

```
ROM-based Setup Utility
Advanced

I/O Configuration                                  Allows BIOS to Select
                                                   Serial Port1 Base
Embedded Serial Port            [3F8/IRQ4]         Addresses.

                                                   ←    Select Screen
                                                   ↑↓    Select Item
                                                   +-    Change Option
                                                   F1    General Help
                                                   F10   Save and Exit
                                                   ESC   Exit

v02.61 (C)Copyright 1985-2006, American Megatrends, Inc.
```

Figure 4-8 Advanced menu–IPMI submenu, upper screen

```
ROM-based Setup Utility
Advanced

IPMI                                               Enabling this
                                                   selection will log
IPMI Specification Version      2.0                POST Progress.
BMC Firmware Version            3.00
BMC Firmware Date               Aug 24 2007
SDR Firmware ID                 ML150G5 SDRR0013
Existing Event Log number       383
Remaining Event Log number        0
Event Log Control
  SYS Firmware Progress         [Disabled]
  BIOS POST Errors              [Enabled]
BIOS POST Watchdog              [Enabled]
OS boot Watchdog                [Disabled]         ←    Select Screen
  Timer for loading OS (min)    [10 Minutes]       ↑↓    Select Item
  Time out action               [No Action ]       +-    Change Option
Serial port assignment          [System]           F1    General Help
Serial Port Switching           [Enabled]          F10   Save and Exit
DCD Snooping                    [Disabled]         ESC   Exit
Serial Port Connection Mode     [Direct]
Date Format to show             [MM DD YYYY]

v02.61 (C)Copyright 1985-2006, American Megatrends, Inc.
```

Figure 4-9 Advanced menu–IPMI submenu, lower screen

```
                    ROM-based Setup Utility
                    Advanced

Serial port assignment          [System]        Enabling this
Serial Port Switching           [Enabled]       selection will enable
DCD Snooping                    [Disabled]      HTTP access.
Serial Port Connection Mode     [Direct]
Date Format to show             [MM DD YYYY]
Date Separator                  [/]

▶ System Event Log
Clear BMC System Event Log
▶ Hardware Health Information

DHCP IP Source                  [Static]
IP Address                      [192.168.002.100]   ←    Select Screen
Subnet Mask                     [255.255.255.000]   ↑↓   Select Item
Default Gateway                 [192.168.002.254]   +-   Change Option
MAC Address                      00-1C-C4-18-3C-94  F1   General Help
BMC Ping Response               [Enabled]           F10  Save and Exit
BMC Telnet Service              [Enabled]           ESC  Exit
BMC HTTP Service                [Enabled]

        v02.61 (C)Copyright 1985-2006, American Megatrends, Inc.
```

Figure 4-10 Advanced menu–IPMI submenu, System Event Log screen

```
                    ROM-based Setup Utility
                    Advanced

System Event Log                                    Use +/- to traverse
                                                    the event log.
Total Number Of Entries:        383

SEL Entry Number:               [  1]
SEL Record ID:              094C
SEL Record Type:            02 (System Event)
Event Timestamp:            01/01/2007 05:24:23
Generator ID:               0020
Event Message Format Ver:   04 (IPMI ver 1.5/2.0)
Event Sensor Type:          14 (Button)
Event Sensor Number:        3E
Event Dir Type:             03                      ←    Select Screen
Event Data:                 01 FF FF                ↑↓   Select Item
                                                    +-   Change Option
                                                    F1   General Help
                                                    F10  Save and Exit
                                                    ESC  Exit

        v02.61 (C)Copyright 1985-2006, American Megatrends, Inc.
```

Figure 4-11 Advanced menu–IPMI submenu, Hardware Health Information, upper screen

```
                    ROM-based Setup Utility
          Advanced

Hardware Health Information                          Acronyms:
                                                     Name:Senser Name
Name            Val      LC     LNC    UNC    UC    Val:Current Value
                                [-1-]                LC :Lower critical
CPU0 Fan R0      03174   0.00   N/A    N/A    1000   LNC:Lower
CPU1 Fan R0     N/A                                      non-critical
Rear Sys Fan1    08818   0.00   N/A    N/A    1000   UNC:Upper
Front Sys Fan1   10822   0.00   N/A    N/A    1000       non-critical
System 12V       12.26   N/A    N/A    N/A    N/A    UC :Upper critical
System 5V        05.12   N/A    N/A    N/A    N/A
System 3.3V      03.33   N/A    N/A    N/A    N/A
System AUX 3.3V  03.31   N/A    N/A    N/A    N/A    ←    Select Screen
System AUX 2.5V  02.52   N/A    N/A    N/A    N/A    ↑↓    Select Item
System AUX 1.8V  01.83   N/A    N/A    N/A    N/A    +-    Change Option
                                [-2-]                F1    General Help
System AUX 1.2V  01.21   N/A    N/A    N/A    N/A    F10   Save and Exit
System -12V     -11.80   N/A    N/A    N/A    N/A    ESC   Exit
Battery Low      01.42   3.13   N/A    N/A    3.47
CPU0 VCCP        01.30   N/A    N/A    N/A    N/A

        v02.61 (C)Copyright 1985-2006, American Megatrends, Inc.
```

Figure 4-12 Advanced menu–IPMI submenu, Hardware Health Information, lower screen

```
                    ROM-based Setup Utility
          Advanced

System AUX 2.5V  02.52   N/A    N/A    N/A    N/A    Acronyms:
System AUX 1.8V  01.84   N/A    N/A    N/A    N/A    Name:Senser Name
                                [-2-]                Val:Current Value
System AUX 1.2V  01.21   N/A    N/A    N/A    N/A    LC :Lower critical
System -12V     -11.80   N/A    N/A    N/A    N/A    LNC:Lower
Battery Low      01.42   3.13   N/A    N/A    3.47       non-critical
CPU0 VCCP        01.30   N/A    N/A    N/A    N/A    UNC:Upper
CPU1 VCCP       N/A                                      non-critical
CPU0 Dmn 0 Temp  37.00   N/A    N/A    95.0   100    UC :Upper critical
CPU0 Dmn 1 Temp N/A
CPU1 Dmn 0 Temp N/A
CPU1 Dmn 1 Temp N/A
                                [-3-]                ←    Select Screen
DIMM Rear Temp   38.00   N/A    N/A    80.0   85.0   ↑↓    Select Item
Inlet Amb Temp   27.00   128    N/A    38.0   45.0   +-    Change Option
PCI Amb Temp     31.00   N/A    N/A    75.0   80.0   F1    General Help
N/A                                                  F10   Save and Exit
N/A                                                  ESC   Exit
N/A
N/A

        v02.61 (C)Copyright 1985-2006, American Megatrends, Inc.
```

Figure 4-13 Advanced menu–Console Redirection submenu

```
ROM-based Setup Utility
Advanced

Configure Serial Console type and parameters

BIOS Serial Console          [Disabled]
EMS Support(SPCR)            [Disabled]

Select Remote Access
type.

←    Select Screen
↑↓   Select Item
+-   Change Option
F1   General Help
F10  Save and Exit
ESC  Exit

v02.61 (C)Copyright 1985-2006, American Megatrends, Inc.
```

Figure 4-14 Advanced menu–USB Configuration submenu

```
BIOS SETUP UTILITY
Advanced

USB Configuration

USB BIOS Support             [Enabled]
USB 2.0 Controller Mode      [HiSpeed]

Options

Disabled
Enabled

←    Select Screen
↑↓   Select Item
+-   Change Option
F1   General Help
F10  Save and Exit
ESC  Exit

v02.61 (C)Copyright 1985-2006, American Megatrends, Inc.
```

Boot menu

The boot menu (Figure 4-15) allows the user to configure the priority sequence of bootable devices. By default, the server searches for boot devices in the following order:

1. CD-ROM/DVD-ROM drives
2. Removable devices
3. Hard drive
4. Embedded NIC
5. USB boot precedence

Figure 4-15 Boot menu

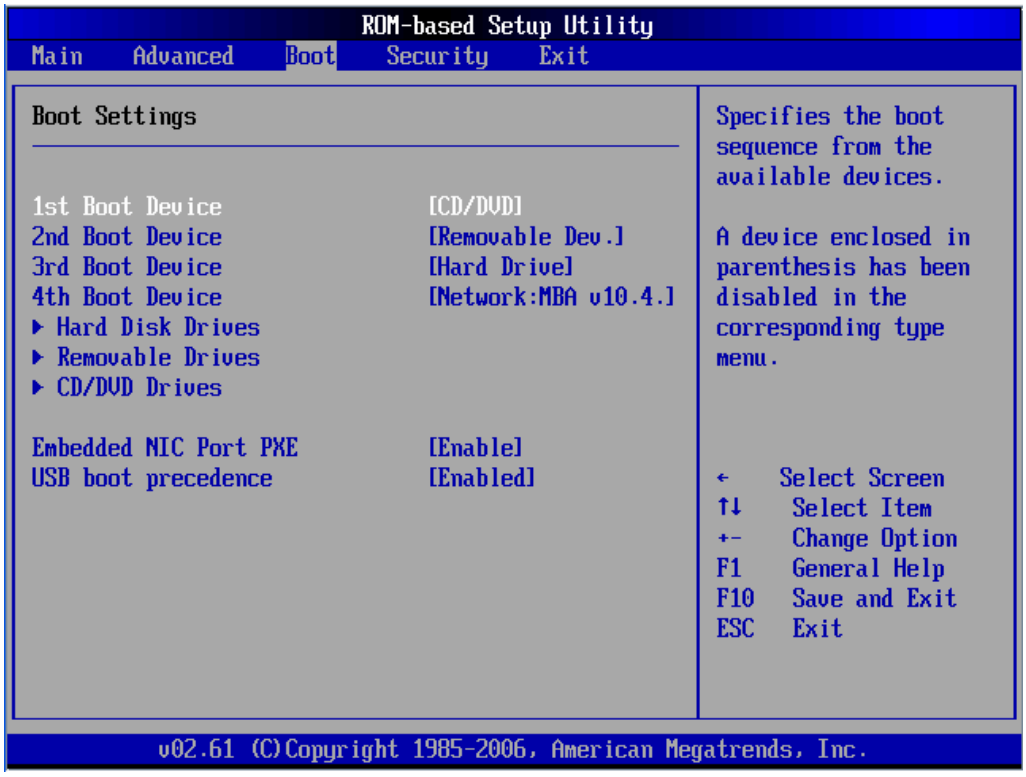

Security menu

The Security menu (Figure 4-16) allows the user to set the administrator password and the power-on password.

The Administrator Password protection level allows the authorized user to change all settings in the Setup Utility and configure access for system users.

If the Administrator Password is set, the Power-on Password protection level allows the authorized user to enable or disable the requirement of entering the Administrator Password when booting the server.

Figure 4-16 Security menu

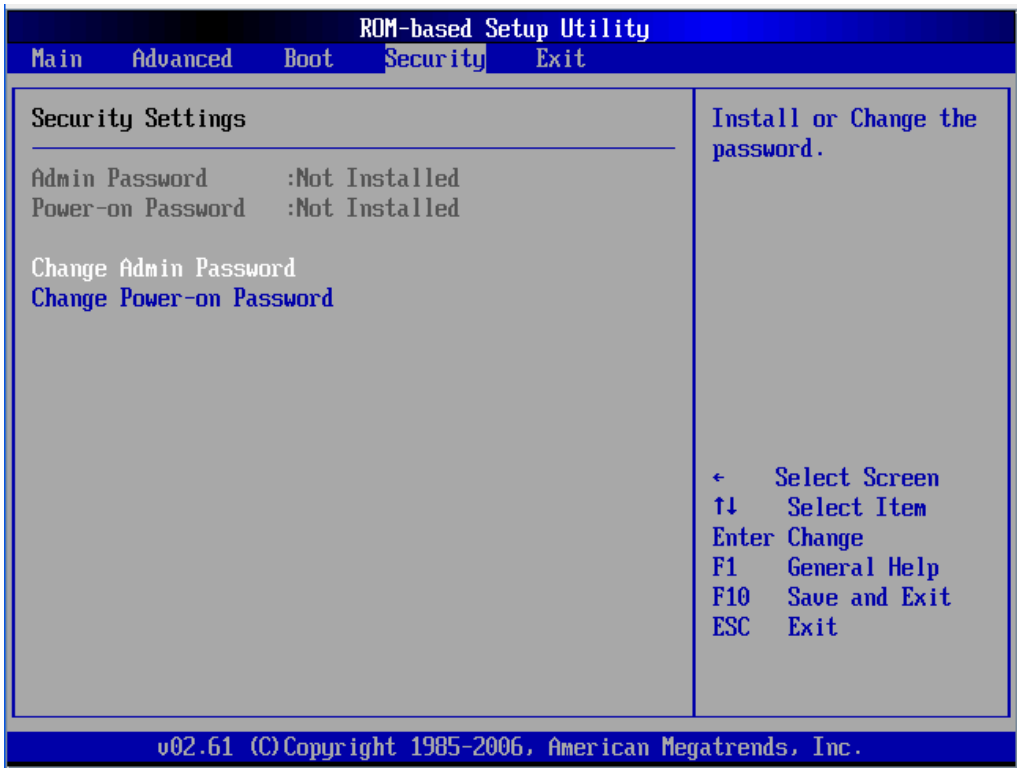

The server is shipped with no password set. To set the administrator password:

1. In the Security menu, select - **Set Admin Password**, and then press **Enter**.
2. In the **Enter New Password** dialog box, type a new password and then press **Enter** (the password may consist of up to eight alphanumeric characters (A-Z, a-z, 0-9).
3. Retype the password to verify the first entry, and then press **Enter**.
4. Press **F10** to close the Setup Utility.
5. After setting the password, Setup automatically sets the selected password field to **Enabled**.

The power-on password option (available only if the Administrator Password is set) is set by selecting **Change Power-on Password** and selecting enable or disable.

Exit menu

The Exit menu (Figure 4-17) allows a user to save or discard changes.

- **Save Changes and Exit** — Save the changes you have made and exit the BIOS Setup Utility (pressing the **F10** key will perform the same function).
- **Discard Changes and Exit** — Exit the BIOS Setup Utility without saving the changes you have made. (pressing the **Esc** key will perform the same function).
- **Discard Changes** — Discard any changes you have made without exiting the BIOS Setup Utility.
- **Load Optimal Defaults** — Load the suggested factory values for all items.
- **Load Failsafe Defaults** — Load the factory values necessary for basic server operation.

Figure 4-17 Exit menu

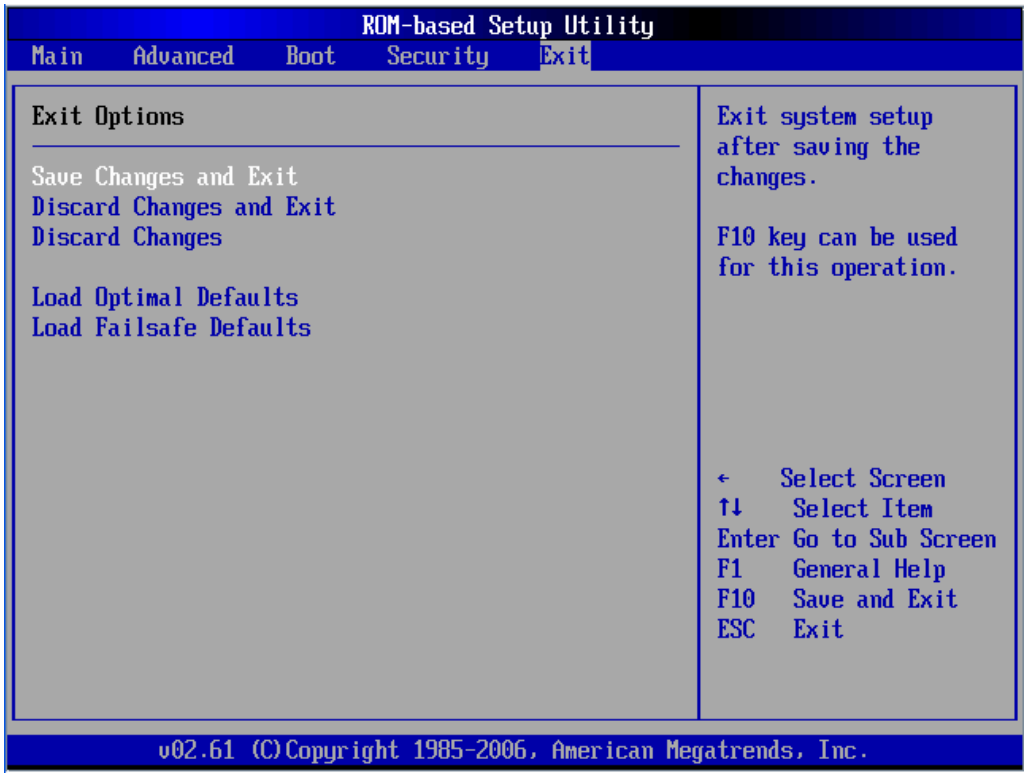

BIOS Updating

To update the system BIOS, a BIOS Update USB disk must be created as follows:

1. Insert a USB disk into the USB port. Please make sure the USB disk can be formatted and bootable.

   Download the Smart Component (SPxxxxx.exe) to a directory on the hard drive and navigate to that directory.
2. From that drive and directory, execute the downloaded file.
3. On executing the downloaded file, the user is prompted to enter the drive letter to be overwritten. Enter the drive letter of the USB disk. The utility creates a bootable USB disk and copies the files over to the USB disk.
4. Reboot the ML150 Generation 5 Server with the USB disk. Make sure the BIOS setting allows booting from the USB disk.
5. Follow the on-screen instructions to finish the flashing of the BIOS.

Clearing CMOS

The Setup configuration values store in battery-backed memory (CMOS) may need to be cleared if the configuration has been corrupted or if incorrect settings made in the Setup Utility have caused error messages to be unreadable.

NOTE: Clearing CMOS deletes all system configurations and password settings.

To clear CMOS:

1. Power down the server.
2. Disconnect the power cord(s) from the server.
3. If necessary, unlock the front bezel.
4. Remove the side access panel.
5. Locate the CMOS Clear button (SW5) on the system board (refer to the "System Board Components, Switches,
   and Indicators" section in Chapter 5.
6. If necessary, remove any expansion boards or cables that prevent access to the CMOS Clear button.
7. Press the CMOS Clear button.
8. If necessary, reinstall any expansion boards and cables
9. Replace the access panel.
10. Reconnect the power cord(s).
11. Power up the server, and during POST, press **F10** to access the Setup Utility.
12. Load setup defaults by pressing **F9**.
13. Set time, date, and other system values as necessary.
14. Press **F10** to close the Setup Utility.

Power-On Self Test

Before the server can be used, all devices must be tested and initialized, and the operating system must be bootstrapped to the memory. This is referred to as Power–On Self Test or POST. POST is a series of diagnostic tests that checks firmware and hardware components on the system to ensure that the server is properly functioning. This diagnostic function automatically runs each time the server is powered on.

These diagnostics, which reside in the BIOS ROM, isolate server-related logic failures and indicate the board or component that you need to replace, as indicated by the error messages. Most server hardware failures will be accurately isolated during POST. The number of tests displayed depends on the configuration of the server.

During POST you can:

- Press **ESC** to skip the HP logo and go to POST boot progress display system summary screen.
- Press **F7** to display the Boot menu.
- Press **F10** to access the Setup Utility.
- Press **F12** to request a network boot (PXE).

POST Error Indicators

When POST detects a system failure, it displays a POST error message.

Recoverable POST Errors

Whenever a non-fatal error occurs during POST, an error message describing the problem appears onscreen. These error messages are displayed in normal video (white text on black background), and show the details of the error. The following is an example of a POST error message:

```
004 - CMOS Date/Time Not Set
```

Table 4-2 lists the most common POST error messages with corresponding troubleshooting recommendation. HP recommends that any errors be corrected, even if the server appears to boot successfully.

Table 4-2 POST Error Messages

Error Code	Error Message	Description/Corrective Action
002	Keyboard/Interface Error	Try a different keyboard. If the error persists, main board replacement may be required.
002	RAM R/W test failed	Memory test read write failed. Replace memory module(s)
002	Password check failed	Password input error. Reset the system and input password again.
004	CMOS Date/Time Not Set	The real time clock did not respond. If the date and time cannot be set, system board replacement may be required.
004	<INS> Pressed	<INS> Insert key has been pressed.
005	DMA Controller Error	HDD DMA controller error. Replace the HDD drive.
010	PS2 Keyboard not found	The keyboard did not respond. If the error continues, replace the keyboard.
010	PS2 Mouse not found	The Mouse did not respond. If the error continues, replace the mouse.
012	Timer Error	The 8254 timer did not respond as expected. System board replacement may be required.
012	CMOS Battery Low	The CMOS battery is discharged. Replace the CMOS battery.
013	CMOS Memory Size Wrong	An uncorrectable memory error has occurred. Replace CMOS module(s)
014	CMOS Settings Wrong	The CMOS battery is discharged. Replaced the CMOS battery.
014	CMOS Checksum Bad	CMOS memory has been corrupted. This message is normal after the CMOS battery is replaced. Run the Setup Utility to restore system configuration.
015	Unlock Keyboard	A keyboard with a lock option is reporting that the lock is active.
501	Redundant Power Supply #1 Unplugged	Redundant Power Supply #1 not detected. Check Redundant Power Supply #1 and plug in.
502	Redundant Power Supply #2 Unplugged	Redundant Power Supply #2 not detected. Check Redundant Power Supply #2 and plug in.
503	Redundant Power Supply #1 Failure	Redundant Power Supply #1 fails. Replace Redundant Power Supply #1.

Table 4-2 POST Error Messages

Error Code	Error Message	Description/Corrective Action
504	Redundant Power Supply #2 Failure	Redundant Power Supply #2 fails. Replace Redundant Power Supply #2.
510	BMC SEL Is Full	BMC SEL is full.
520	Need To Upgrade BMC Firmware Version To V3.00 or Above	Upgrade BMC Firmware.

POST Related Troubleshooting

The POST is an important routine that checks the basic functions of the server during the boot process. Perform the following procedures when POST fails to run, displays error messages, or emits beep codes.

If the POST fails during boot up (displays error messages, or emits beep codes), check the following:

- All external cables and power cables should be firmly plugged in.
- The power outlet to which the server is connected and is working.
- The server and monitor are both turned on. The bi-color status LED indicator on the front panel must be lit up green.
- The monitor's contrast and brightness settings are correct.
- All internal cables are properly connected and all boards firmly seated.
- The processor is fully seated in its socket on the system board.
- The heat sink assembly is properly installed on top of the processor.
- All memory modules are properly installed.
- If you have installed a PCI accessory board, verify that the board is firmly seated and any switches or jumpers on the board are properly set. Refer to the documentation provided with the accessory board.
- All internal cabling and connections are in their proper order.
- Verify that each switch on the system board is properly set, especially if any switch positions have been changed prior to booting the server.

NMI button

The system board has a Non-Maskable Interrupt (NMI) button (SW1) that provides a diagnostic function when the server is in an unrecoverable state (locked up or "hung"). The NMI button, when pressed, allows a memory dump to be performed and crash dump files to be created before a hard reset (power cycle) is performed. This function requires support from the operating system (OS).

△ **CAUTION:** The NMI button is for diagnostic purposes only and should never be pressed while the server is operating normally. **Pressing this button while the server is in normal operation will cause the system to halt immediately**.

NOTE: The NMI button may not work in some situations, such as if an NMI has already occurred or if the OS crash handler is unable to run properly.

5 Components, Switches, and Indicators

This chapter contains illustrations and tables identifying and describing the key components (including connectors), switches, and LED indicators located on the front and rear panels, the system board, and hard drives of the HP ProLiant ML150 Generation 5 Server.

Front and Rear Panel Components, Switches, and Indicators

Figure 5-1 Front and Rear Panel Components, Switches, and Indicators

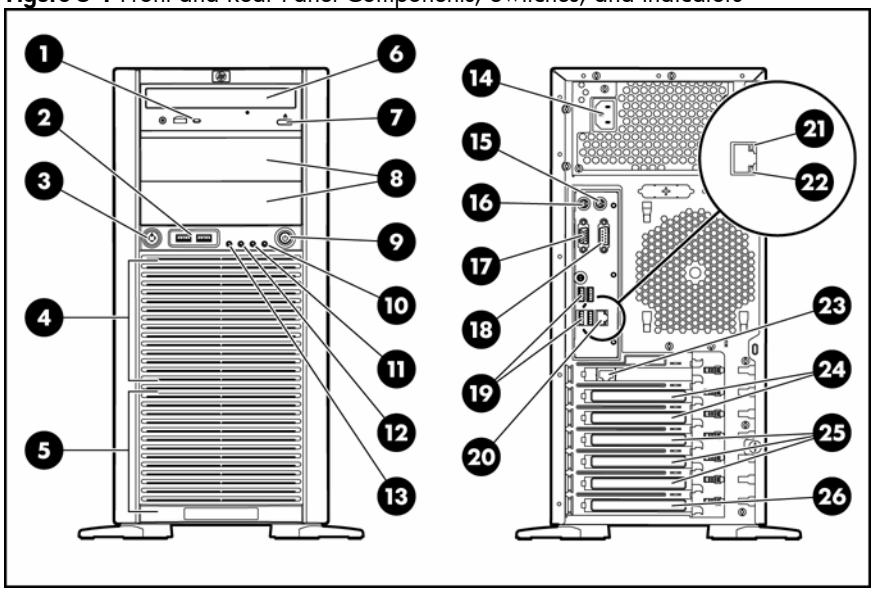

Table 5-1 Front and Rear Panel Components

Item	Description	Item	Description
1	Optical drive activity LED	14	AC input connector
2	USB 2.0 ports (2)	15	Mouse connector
3	Front key lock	16	Keyboard connector
4	Upper hard drive bays 1-4	17	VGA monitor connector
5	Lower hard drive bays 5-8	18	Serial port connector
6	Optical drive	19	USB 2.0 ports (4)
7	Media eject button	20	NIC port connector
8	Half-height drive bays	21	NIC activity LED
9	Power button	22	NIC link LED
10	System power LED	23	IPMI port connector
11	Hard drive activity LED	24	PCIe x8 slot covers (2)

Table 5-1 Front and Rear Panel Components

Item	Description	Item	Description
12	NIC LED	25	PCIe x4 slot covers (3)
13	System health LED	26	PCI 2.3-compliant slot cover

Table 5-2 Front and rear panel LED indicator status

LED	Status	Description
Optical drive	Green/amber (blinking)	Media is being read from/written to
	Off	No drive activity
System health	Red (blinking)	Critical system failure (processor, memory, voltage regulator, thermal event, fan, NMI)
	Amber (blinking)	System degraded
	Green	System is on and no failures detected
	Off	The system is off with no failure prior to power down.
NIC	Green (blinking)	Network activity detected
	Green (steady)	Linked to internet
Hard drive activity	Green (blinking)	Drive activity
	Off	No drive activity
System power	Green	System is on **CAUTION:** Removing AC power while the LED displays Green could result in lost data.
	Amber	System is in standby or off, and receiving AC power
	Off	System is off and power cord(s) are unplugged
NIC activity	Green (blinking)	Network activity is detected
	Off	No network activity
NIC link	Off	No connection
	Green	10 Mb/s or 100 Mb/s operation
	Amber	1 Gb/s operation

System Board Components, Switches, and Indicators

Figure 5-2 System Board Components, switches, and indicators

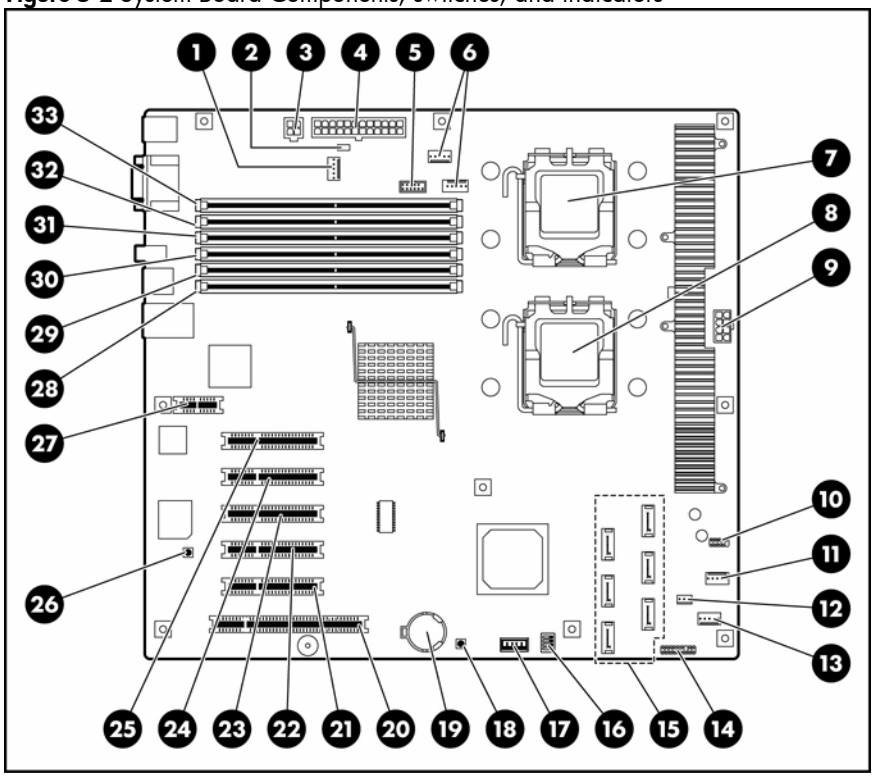

Table 5-3 System board components, switches, and indicators

Item	System board Designator	Description
1	J4	Rear system fan connector
2	LED6	Auxiliary power LED
3	J13	Power supply connector (4-pin)
4	J23	Power supply connector (24-pin)
5	J26	Redundant power supply connector (12-pin)
6	J27, J28	Processor fan connectors (J27, processor 1; J28, processor 0)
7	CPU0	Processor 0 socket
8	CPU1	Processor 1 socket
9	J38	Power supply connector (8-pin)
10	J36	Front panel USB 2.0 port connector
11	J37	Internal USB 2.0 port connector
12	JP9	Thermal sensor connector

Table 5-3 System board components, switches, and indicators

Item	System board Designator	Description
13	J35	Front system fan connector
14	J33	Front panel I/O connector
15	SATA1-6	SATA connectors (6)
16	SW6	Chassis/board ID DIP switches
17	J29	Internal USB 2.0 port connector
18	SW5	CMOS clear button
19	XBAT1	Battery
20	J12	PCI 2.3-compliant slot 1 connector
21	PCIE1	PCIe x4 slot 2 connector
22	PCIE2	PCIe x4 slot 3 connector
23	PCIE3	PCIe x4 slot 4 connector
24	PCIE4	PCIe x8 slot 5 connector
25	PCIE5	PCIe x8 slot 6 connector
26	SW1	NMI button
27	J8	IPMI slot 7 connector
28	J14	DIMM slot 6C (channel 0, single rank)
29	J15	DIMM slot 5C (channel 1, single rank)
30	J16	DIMM slot 4B (channel 0, single rank)
31	J17	DIMM slot 3B (channel 1, single rank)
32	J18	DIMM slot 2A (channel 0, dual rank)
33	J19	DIMM slot 1A (channel 1, dual rank)

System board LED

The system board has an Auxiliary power LED that is illuminated as long as the server is connected to AC power.

System board switches

CMOS clear button

The system board has a CMOS clear button (SW5, item 18 in Figure 5-2) that allows the system configuration data in non-volatile memory to be cleared. To clear the CMOS refer to the procedure described in Chapter 4 in the section “Clearing CMOS.”

NMI button

The system board has a Non-Maskable Interrupt (NMI) button (SW1, item 26 in Figure 5-2) that provides a diagnostic function if the system becomes locked up or “hung.” For more information refer to the Chapter 4 section “NMI button.”

△ **CAUTION:** The NMI button is for diagnostic purposes only. **Pressing this button while the server is in normal operation will cause the system to halt immediately**.

SAS/SATA Hot-Plug Hard Drive LEDs

The SAS and SATA hot-plug hard drive LEDs are located on each physical drive and visible when the front bezel is open.

- Activity LED—This green LED indicates the disk drive access activity. This LED is controlled by the disk drive directly. When a drive is accessed, the LED shows a green light
- Status LED—This amber/blue LED indicates the drive operating condition: normal, warning, or failure.

Table 5–4 describes the LEDs signals used to indicate the operating status of a SAS or SATA disk drive.

Table 5-4 Carrier status light definitions

Activity (green)	Status (amber/blue)	Description
		No power, offline or not configured
		Normal operation under power. no activity [green is on-solid]
		Normal operation under power, disk activity [green is fluttering]
		Offline, disk not being accessed, predictive failure [amber is flashing at constant 1 Hz]
		Online, no activity, predictive failure (further investigation required) [green is fluttering, amber is flashing at constant 1 Hz]
		Disk activity, predictive failure (further investigation required) [green is fluttering, amber is flashing at constant 1 Hz]
		Offline, no activity, critical fault condition [amber is on-solid]
		Offline, drive selected (blue reserved for identification only) [blue is on steady]
		Drive rebuilding [green is flashing at constant 1 Hz]

6 Physical and Operating Specifications

This chapter provides physical and operating specifications for the HP ProLiant ML150 Generation 5 server. Specifications are provided for the following:

- System unit
- Software
- Physical
- Environmental
- Power supply
- Memory
- Processor
- Optical drive
- SAS drive
- SATA drive
- SAS/SATA controller card

System Unit

Table 6-1 Hardware Specifications

Item	Component
Processor socket	Intel LGA771(2)
Processor support	Intel Xeon Dual-Core Processor 5100/5200 series Intel Xeon Quad-core Processor 5300/5400 series
Chipset	Intel® 5100 Chipset (MCH & ICH9R)
Hardware monitoring device	ServerEngines Pilot2
Gigabit Ethernet controller	Broadcom BCM5722
Video controller	Server Engines Pilot2
I/O subsystem	• One PCI 2.3-compliant slot • Three PCIe x4 slots • Two PCIe x8 slots
Memory	Six DIMM slots supporting up to 16 GB of registered DDR2 533-/667-MHz DIMMs with ECC
Default media storage	• One-half height IDE CD-ROM drive • Non-hot-plug or hot-plug HDD cage supporting up to four SATA/SAS hard drives

Table 6-1 Hardware Specifications

Item	Component
Optional media storage	• Two half-height drive bays for additional CD-ROM drive and tape drive • HDD cage supporting up to four hot-plug SATA/SAS hard drive
I/O ports	PS2 keyboard port, PS2 mouse port, USB 2.0 ports (two front-mounted ports, four rear-mounted ports and two internal connectors on the system board), video (VGA) port, serial port and NIC (GbE) port.
Status LED indicators	Front panel: • Optical drive activity • System health • NIC • Hard drive activity • System power
	Rear panel: • NIC activity • NIC link
	System board: • 5-V auxiliary power
Power Supply unit (PSU)	Delta PD-650BB A (650 watts)
Thermal solution	• Two system fans (rear system fan and front system fan) • Processor heatsink with fan (one per processor) • Power supply fan (one per power supply)

Table 6-2 Software Specifications

Item	Description
Network operating system (NOS) support	• Microsoft Windows Server 2008 Standard Edition • Microsoft Windows Server 2008 Standard x64 Edition • Microsoft Windows Server 2008 Enterprise Edition • Microsoft Windows Server 2008 Enterprise x64 Edition • Microsoft Windows Small Business Server 2008 • Microsoft Windows Server 2008 Web Edition • Microsoft Windows 2000 Server • SCO OpenServer 5.0.7 • SCO OpenServer 6 • SCO UnixWare 7.1.4 • Red Hat Enterprise Linux 4 AS (x86) • Red Hat Enterprise Linux 4 AS (EM64T) • Red Hat Enterprise Linux 5 AS (x86) • Red Hat Enterprise Linux 5 AS (EM64T) • SUSE Linux Enterprise Server 9 (x86) • SUSE Linux Enterprise Server 9 (EM64T) • SUSE Linux Enterprise Server 10 (EM64T) • Red Flag Advanced Server 4.1
System diagnostics	• AMI BIOS Setup Utility • HP Insight Diagnostics

Table 6-3 Physical Dimensions

Parameter	Description
System board platform	EATX (Extended Advanced Technology)
System board dimension	12 in. x 13 in.
Server dimensions in tower configuration (H x W x D)	16.69 in. x 7.87 in. x 24.33 in. (424 mm x 200 mm x 616.86 mm)
Server weight in basic configuration, excludes keyboard and monitor	40.89 lb. (18.55 kG)

Table 6-4 Environmental Specifications

Parameter	Description
Temperature:	
Operating	+50 to +95° F (+10 to +35° C)
Non-operating	-22 to 140° F (-30 to 60° C)
Storage	-22 to 140° F (-30 to 60° C)
Wet-bulb temperature	84.2° F (29° C)
Relative humidity:	
Operating	10 % to 90 % (non-condensing)
Non-operating	10 % to 95 %
Storage	10 % to 95 %
Altitude:	
Operating	0 to 10,000 ft (0 to 3000 meters)
Non-operating	0 to 30,000 ft (0 to 9144 meters)

Table 6-5 Power Supply Specifications (650W)

Parameter	Description
Dimensions (H x W x D)	3.86 in. x 6.29 in. x 7.87 in. (98 mm x 160 mm x 200 mm)
Weight (approximate)	6.31 lb. (2.86 kg)
Input requirements :	
Rated input voltage	90 VAC to 265 VAC
Normal line voltage	100 VAC to 127 VAC /200 VAC to 240 VAC
Line frequency	47 – 66 Hz
Rated input current load:	
Low line	11.6A @100 VAC to 127 VAC
High line	5.5A @ 200 VAC to 240 VAC
BTU rating	N/A
Power supply output power:	
Steady state power in watts	650 Watts
Maximum peak power in watts	650 Watts
Temperature range:	
Operating	+10°C to +45°C
Shipping	–40°C to +70°C
Relative humidity:	
Operating	5 % to 95 % (non-condensing at +40° C)
Non-operating	90 % (for a period of 24 hours at 65° C ambient)

Table 6-6 Power Supply Specifications (750W)

Parameter	Description
Dimensions (H x W x D)	3.35 in. x 6.38 in. x 11.93 in. (85 mm x 162 mm x 303 mm)
Weight (approximate)	1.79 lb. (0.81 kg)
Voltage	+12V DC nominal, +10.8V to +13.2V DC. +12Vaux DC nominal, +10.8V to +13.2V DC.
Current:	
+12V	62.5A
+12Vaux	2.5A
Load Ratings:	
+12V	Max: 48A, Min: 1A
+3.3V	Max: 15A, Min: 0A
+5.0V	Max: 18A, Min: 0A
5Vaux	Max: 2A, Min: 0A
Power supply output power:	
Steady state power in watts	750 Watts
Maximum peak power in watts	750 Watts

Table 6-6 Power Supply Specifications (750W)

Parameter	Description
Temperature range:	
Operating	+5°C to +50°C
Shipping	-40°C to +85°C
Relative humidity:	
Operating	5 % to 95 % (non-condensing)
Non-operating	5 % to 95 % (non-condensing)

Memory

Table 6-7 Memory Specifications

Item	Description
Sockets	Three DIMM sockets per channel (six total)
DIMM capacity	512-MB,1-GB, 2-GB
Speed	533/667-MHz
Supported technologies	256-Mb, 512-Mb, 1-Gb, 2-Gb, and 4-Gb for x4 and x8 devices
DIMM type supported	Registered DDR2 533/667 DIMM with ECC

Processor

The HP ProLiant ML150 Generation 5 server provides two Intel LGA771 processor sockets that support Intel Xeon Dual-Core 5100/5200 series and Intel Xeon Quad-Core 5300/5400 series processors.

△ **CAUTION:** Two-processor (2P) systems must be configured with processors of the same type.

For systems configured with two processors, both processors must be of the same type.

Table 6-8 Intel Xeon Dual-Core Processor 5100 series specifications

Model Number	Operating Frequency	FSB Speed	On-die L2 cache	Thermal Design Point (power)
E5160	3.00 GHz	1333 MHz	4 MB	80 watts
E5150	2.66 GHz	1333 MHz	4 MB	65 watts
E5148	2.33 GHz	1333 MHz	4 MB	40 watts
E5140	2.33 GHz	1333 MHz	4 MB	65 watts
E5130	2.00 GHz	1333 MHz	4 MB	65 watts

Table 6-8 Intel Xeon Dual-Core Processor 5100 series specifications

Model Number	Operating Frequency	FSB Speed	On-die L2 cache	Thermal Design Point (power)
E5120	1.86 GHz	1066 MHz	4 MB	65 watts
L5110	1.60 GHz	1066 MHz	4 MB	65 watts

Table 6-9 Intel Xeon Dual-Core Processor 5200 series specifications

Model Number	Operating Frequency	FSB Speed	On-die L2 cache	Thermal Design Point (power)
E5272	3.40 GHz	1600 MHz	6 MB	80 watts
E5260	3.33 GHz	1333 MHz	6 MB	65 watts
E5205	1.86 GHz	1066 MHz	6 MB	65 watts
L5250	3.16 GHz	1333 MHz	6 MB	40 watts

Table 6-10 Intel Xeon Quad-Core Processor 5300 series specifications

Model Number	Operating Frequency	FSB Speed	On-die L2 Cache	Thermal Design Point (power)
X5365	3.00 GHz	1333 MHz	8 MB	120 watts
X5355	2.66 GHz	1333 MHz	8 MB	120 watts
L5335	2.00 GHz	1333 MHz	8 MB	50 watts
L5320	1.86 GHz	1066 MHz	8 MB	50 watts
L5310	1.60 GHz	1066 MHz	8 MB	50 watts
E5345	2.33 GHz	1333 MHz	8 MB	80 watts
E5335	2.00 GHz	1333 MHz	8 MB	80 watts
E5320	1.86 GHz	1066 MHz	8 MB	80 watts
E5310	1.60 GHz	1066 MHz	8 MB	80 watts

Table 6-11 Intel Xeon Quad-Core Processor 5400 series specifications

Model Number	Operating Frequency	FSB Speed	On-die L2 Cache	Thermal Design Point (power)
E5450	3.00 GHz	1333 MHz	12 MB	80 watts
E5440	2.83 GHz	1333 MHz	12 MB	80 watts
E5430	2.66 GHz	1333 MHz	12 MB	80 watts
E5420	2.50 GHz	1333 MHz	12 MB	80 watts
E5410	2.33 GHz	1333 MHz	12 MB	80 watts
E5405	2.00 GHz	1333 MHz	12 MB	80 watts
L5430	2.66 GHz	1333 MHz	12 MB	50 watts

SATA DVD-ROM Drive

Table 6-12 IDE CD-ROM Specifications

Parameter	Description
Form factor	5.25 in, half-height
Dimensions:	
Height	41.5 mm (1.6 in)
Width	145.8 mm (5.7 in)
Depth	170.0 mm (6.7 in)
Weight	0.8 kg (1.8 lb)
Supported disc formats	Mixed mode (audio and data combined) CD-DA, mode (basic format), Mode 2, Form 1 and Form 2 Photo-CD (multi-session), CD-XA CD-1, CD-Plus/CD-Extra,0 CD-ROM, CD-R, CD-RW DVD-ROM, DVD-ROM DL, DVD-RAM, DVD+R, DVD+R DL, DVD+RW, DVD-R, DVD-RW, DVD-R DL
Read speeds	CD-ROM, CD-R: up to 48x CD-RW: up to 32x DVD-ROM: up to16x DVD+R/-R/+RW: up to 8x DVD-RAM: up to 4x
Disc capacity	Single layer: up to 4.7 GB Double layer: up to 8.5 GB
Average access time:	
Typical random	CD: < 125 ms DVD: <140 ms
Full stroke	CD: <210 ms DVD: < 250 ms
Three-way eject support	Using software Using drive open/eject button Using emergency eject hole
Operating conditions:	
Temperature	41° F to 110° F (5° C to 50° C)
Relative humidity	10% to 90% RH

SAS Hard Drive

Table 6-13 SAS Hard drive specifications

Parameter	36-GB Drive	72-GB Drive	146-GB Drive	300-GB Drive
Capacity	36 GB	72 GB	146 GB	300 GB
Height	1 in	1 in	1 in	1 in
Width	4 in	4 in	4 in	4 in
Interface	SAS	SAS	SAS	SAS
Transfer Rate	1441 to 1607 MB/s	1441 to 1607 MB/s	1441 to 1607 MB/s	1441 to 1607 MB/s
Rotational Speed	15,000 RPM	15,000 RPM	15,000 RPM	15,000 RPM
Bytes per sector	512	512	512	512
Operating Temperature	5°C to 60°C	5°C to 60°C	5°C to 60°C	5°C to 60°C

Table 6-14 Dual Port SAS Hard drive specifications

Parameter	72-GB Drive	146-GB Drive	300-GB Drive	450-GB Drive
Capacity	72 GB	146 GB	300 GB	450 GB
Height	1 in	1 in	1 in	1 in
Width	4 in	4 in	4 in	4 in
Interface	SAS	SAS	SAS	SAS
Transfer Rate	1607 to 1997 MB/s	1607 to 1997 MB/s	1607 to 1997 MB/s	1607 to 1997 MB/s
Rotational Speed	15,000 RPM	15,000 RPM	15,000 RPM	15,000 RPM
Bytes per sector	512	512	512	512
Operating Temperature	5°C to 60°C	5°C to 60°C	5°C to 60°C	5°C to 60°C

SATA Hard Drive

Table 6-15 SATA Hard Drive Specifications

Item	80-GB	160-GB	250-GB	500-GB
Capacity	80 GB	160 GB	250 GB	500 GB
Dimensions:				
Height	26.10 mm (1.03 in)	26.10 mm (1.03 in)	26.10 mm (1.03 in)	26.10 mm (1.03 in)
Width	101.6 mm (4.0 in)	101.6 mm (4.0 in)	101.6 mm (4.0 in)	101.6 mm (4.0 in)
Depth	147.0 mm (5.8 in)	147.0 mm (5.8 in)	147.0 mm (5.8 in)	147.0 mm (5.8 in)
Weight	0.63 kg (1.4 lb)	0.63 kg (1.4 lb)	0.63 kg (1.4 lb)	0.63 kg (1.4 lb)
Interface	SATA	SATA	SATA	SATA
Maximum transfer rate	1.5 Gb/s	1.5/3.0 Gb/s	1.5/3.0 Gb/s	1.5/3.0 Gb/s
Rotational speed	7200 RPM	7200 RPM	7200 RPM	7200 RPM
Byte per sector	512	512	512	n/a
Sectors per drive	160,086,528	320,173,056	490,234,752	n/a
Operating temperature	0°C to 60°C	0°C to 60°C	0°C to 60°C	0°C to 60°C

Item	750-GB	1-TB
Capacity	750 GB	1 TB
Dimensions:		
Height	26.10 mm (1.03 in)	26.10 mm (1.03 in)
Width	101.6 mm (4.0 in)	101.6 mm (4.0 in)
Depth	147.0 mm (5.8 in)	147.0 mm (5.8 in)
Weight	0.63 kg (1.4 lb)	0.63 kg (1.4 lb)
Interface	SATA	SATA
Maximum transfer rate	1.5/3.0 Gb/s	3.0 Gb/s
Rotational speed	7200 RPM	7200 RPM
Byte per sector	512	512
Max. Block Number	1,465,149,167	1,953,525,167
Operating temperature	0°C to 55°C	0°C to 55°C

HP Smart Array E200 Controller Card

The HP Smart Array E200 Controller Card provides RAID 0/1 support for up to eight SAS drives.

Table 6-16 HP Smart Array E200 Controller Specifications

Item	Description
Form factor	Full-size PCIe card
Server Interface	PCIe x4 (2 GB maximum bandwidth)
Drive interface	1.5 GB/s and 3.0 Gbit/s SAS 1.5 Gbit/s SATA
Card dimensions (not including bracket): Height Depth	 4.4 in. (11.1 cm) 12.3 in. (31.2 mm)
Supported devices	Hard drive, disk array RAID 0, 1, and 5)
Number of channels	Two Internal x4 wide port connectors
Maximum number of logical drives	32
Maximum volume capacity: per single logical drive Total	 2 TB 4.5 TB
Cache memory	E200/64: 64 MB E200/128: 128 MB (battery-backed write cache)
Standard compliance	EMC Class-B
Upgradeable firmware?	Yes

Index

T

U

W